Technical Data

Pump Name 3LP 65-250/306

Customer	Date	2024-06-20	Company	
Contact	Item no.		Issued by	
Phone	Project		Phone	
E-mail	Project ID	Proiect redenumit 2024-06-20 10:03:09	E-mail	

Requested data

1	Pump type		CENTRIFUGAL PUMPS	Fluid	Water
2	Number of pumps / Reserve		1 / 0	Liquid temperature °C	20
3	Flow	m³/h		Kin. viscosity mm²/s	1.005
4	Head	m		Vapour pressure bar	0.0234
5	Geodetic head	m		PH value	
6	Inlet pressure (pin)	bar	0	Density kg/m³	998.3
7	Available system NPSH			Solids Weight %	0
8	Ambient temperature	°C	20		

Pump

9	Pump Name		3LP 65-250/306	Frequency	Hz	60
10	Design		CENTRIFUGAL PUMPS	Installation type		STANDARD
11	Manufacturer		EBARA	Impeller Diameter	Max. mm	203
12	Speed	rpm	3520		Designed mm	203
13	No. of Stage		1		Min. mm	203
14	Connection Suction side		DIN 2532	Flow	Operating m³/h	
15	Connection Discharge side		DIN 2532		Max- m³/h	144
16	Max Working Pressure	bar	10		Min- m³/h	54
17	Shut-off head	bar	7.83	Head	Operating m	
18	Total weight	kg	See the table of "Dimensions".		- (Qmax.) m	52.1
19	Shaft power	kW			- (Qmin.) m	78.6
20				Max. Shaft Power at max. impeller	kW	29.86
21	Required pump NPSH	m		Efficiency	%	

Materials

22	Impeller	CF8M		
23	Casing	CF8M		
24	Shaft	AISI 316L		
25				
26				
27				

Motor

28	Manufacturer		LAFERT	Insulation class	F
29	Type		TEFC_3LP 65-250/306_460_Three Phase	Phases	3~
30	Specific design		IE2 / 60 Hz / Pole pairs 1	Frame size	
31	Rated power	kW	30	Weight kg	
32	Number of poles		2	Electric voltage V	460
33	Speed	rpm	3500	Electric current A	46
34	Degree of protection		IP 55		
35					

Remarks

EBARA

Performance Curve

Pump Name 3LP 65-250/306

Customer	Date	2024-06-20		Company	
Contact	Item no.			Issued by	
Phone	Project			Phone	
E-mail	Project ID	Proiect redenumit 2024-06-20 10:03:09		E-mail	

Requested data

1	Flow	m³/h	
2	Head	m	
3	Geodetic head	m	

Pump

Operating flow	m³/h		Frequency	Hz	60
Operating head	m		Number of poles		2
Impeller diameter designed	mm	203	Speed	rpm	3520

Test standard: ISO 9906:2012 - Grade3B

Water; 20°C; 998.3kg/m³; 1mm²/s

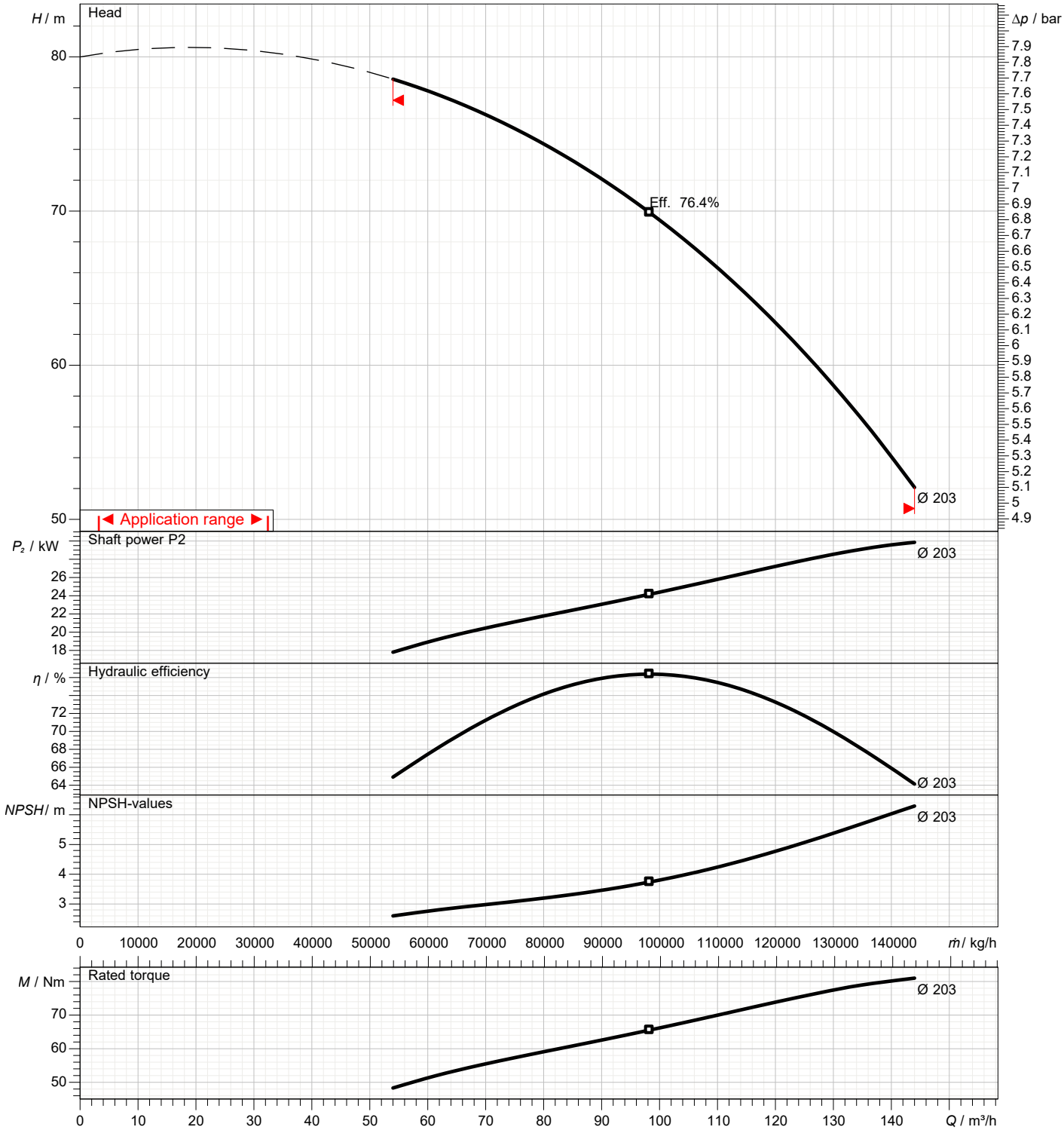

EBARA

Dimensions

Pump name 3LP 65-250/306

Customer	Date	2024-06-20	Company
Contact	Item no.		Issued by
Phone	Project		Phone
E-mail	Project ID	Proiect redenumit 2024-06-20 10:03:09	E-mail

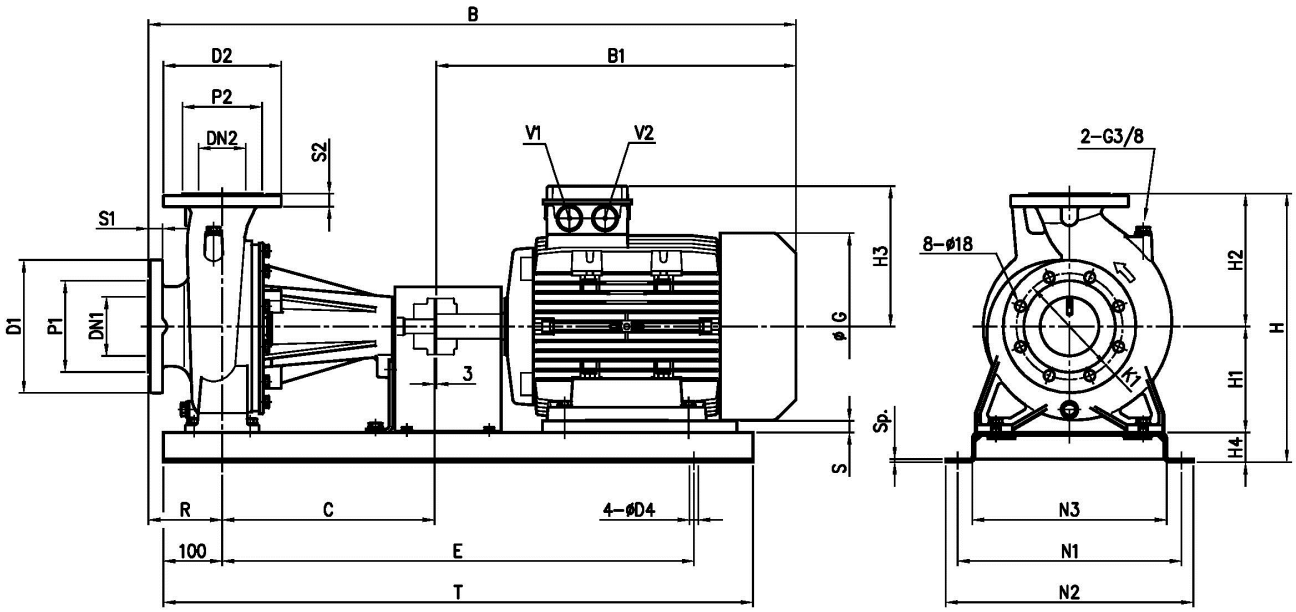

Dimensions in	mm							
1	B	1341	H3	300				
2	B1	768	H4	60				
3	C	470	N1	530				
4	D4	19	N2	590				
5	Dia D1	200	N3	460				
6	Dia D2	85	R	100				
7	Dia DN1	80	S1	22				
8	Dia DN2	65	S2	20				
9	Dia K1	160	Sp,	[]{([].Sp, = [P)}				
10	Dia P1	135	T	1200				
11	Dia P2	120	V1	M40x1,5				
12	E	100	V2	M40x1,5				
13	G	399	Weight P&M	354 kg				
14	H	510						
15	H1	200						

EBARA

(1/4)
Construction

Pump name 3LP 65-250/306

Customer	Date	2024-06-20	Company
Contact	Item no.		Issued by
Phone	Project		Phone
E-mail	Project ID	Proiect redenumit 2024-06-20 10:03:09	E-mail

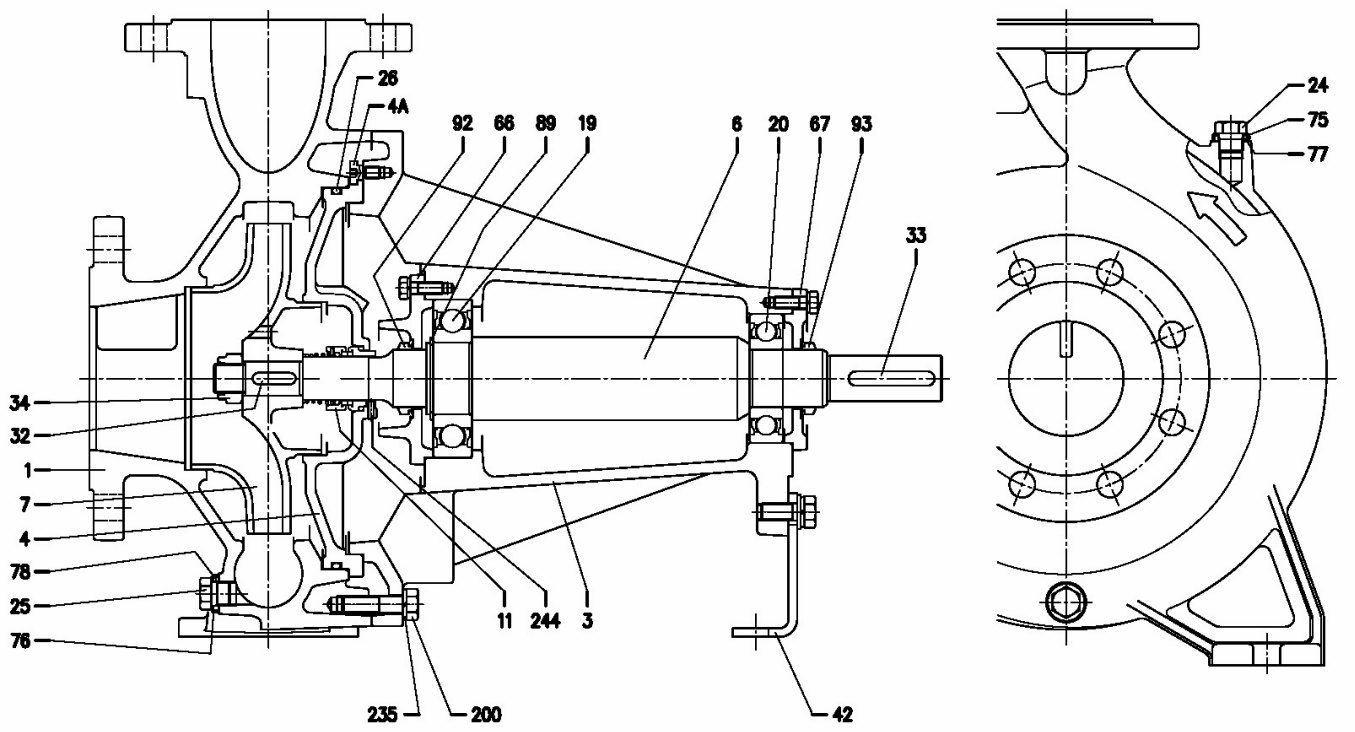

(2/4)
Construction

Pump name 3LP 65-250/306

Customer	Date	2024-06-20		Company	
Contact	Item no.			Issued by	
Phone	Project			Phone	
E-mail	Project ID	Proiect redenumit 2024-06-20 10:03:09		E-mail	

N°	PART NAME		MATERIAL	DIMENSIONS	STANDARD	Q.TY
1	Casing		CF8M - EN 1.4408 (AISI 316))			1
3	Support		Cast iron EN-GJL-200-EN 1561			1
4	Casing cover		EN 1.4401 (AISI 316)			1
4A	Screw for casing cover		EN 1.4301 (AISI 304)			2
6	Shaft		EN 1.4462 (Duplex stainless steel) - Wet extension			1
6A	Flexible coupling	[6]	Cast iron EN-GJL-250-EN 1561			1
7	Impeller		CF8M - EN 1.4408 (AISI 316)			1
11	Mechanical seal	[5]	-			1
12	Motor		-			1
19	Bearing	[7]	-			1
20	Bearing	[7]	-			1
24	Plug		EN 1.4404 (AISI 316L)	G3/8		1
25	Plug		EN 1.4404 (AISI 316L)	G3/8		1
26	O-ring	[4]	FPM/EPDM	253.36x5.34	OR 6995	1
32	Key	65-250 80-200 d=24 mm	EN 1.4401 (AISI 316)	8x7x30	UNI 6604	1
						1
		80-250 d=29 mm		8x7x40		1
33	Key		C 40	10x8x60	UNI 6604	1
34	impeller nut	65-250 80-200 d=24 mm	EN 1.4404 (AISI 316L)	M20x1.5	UNI 7474	1
						1
		80-250 d=29 mm		M24x2		1
42	Pump support		Zincate steel			1
42A	Base		Zincate steel			1
44	Protection		Zincate steel			1
50	Foot		Aluminium			0
50A	Spacer		Aluminium			[1]
50B	Spacer		Aluminium			[2]
50C	Spacer for protection		Aluminium			[3]
66	Impeller side bearing cover		Cast iron EN-GJL-200-EN 1561			1
67	Motor side bearing cover		Cast iron EN-GJL-200-EN 1561			1
75	Washer (plug)		EN 1.4404 (AISI 316L)			1
76	Washer (plug)					1
77	O-ring (plug)	[4]	FPM/EPDM			1
78	O-ring (plug)	[4]				1
89	Snap ring		Carbon tool steels TC 80	Ø 50	UNI 7435	1
92	V-ring		-	VS-0040		1
93	V-ring					1
200	Screw		Stainless steel A2 70 class ISO 3506/1	M 12x45	UNI 5739	10
235	Washer		EN 1.4301 (AISI 304)	13	UNI 8842	10
244	Pin	[3]	EN 1.4301 (AISI 304)	4x12	UNI 6873	1

[1] Quantity =0 for 65-250, 80-200/226 and 80-250/556
Quantity =2 for 80-200/306, 80-200/376 and 80-250/456
[2] Quantity =0 for 65-250, 80-200/226 and 80-250/556
Quantity =2 for 80-200/306, 80-200/376 and 80-250/456
[3] Not for H, HW, HSW, E version.
[4] See **MECHANICAL SEAL**, “O-ring” column, see CONSTRUCTION 3
[5] See **MECHANICAL SEAL**, see CONSTRUCTION 3
[6] See **FLEXIBLE COUPLING**, see CONSTRUCTION 3
[7] See **BEARINGS**,

(3/4)
Construction

Pump name 3LP 65-250/306

Customer	Date	2024-06-20	Company
Contact	Item no.		Issued by
Phone	Project		Phone
E-mail	Project ID	Proiect redenumit 2024-06-20 10:03:09	E-mail

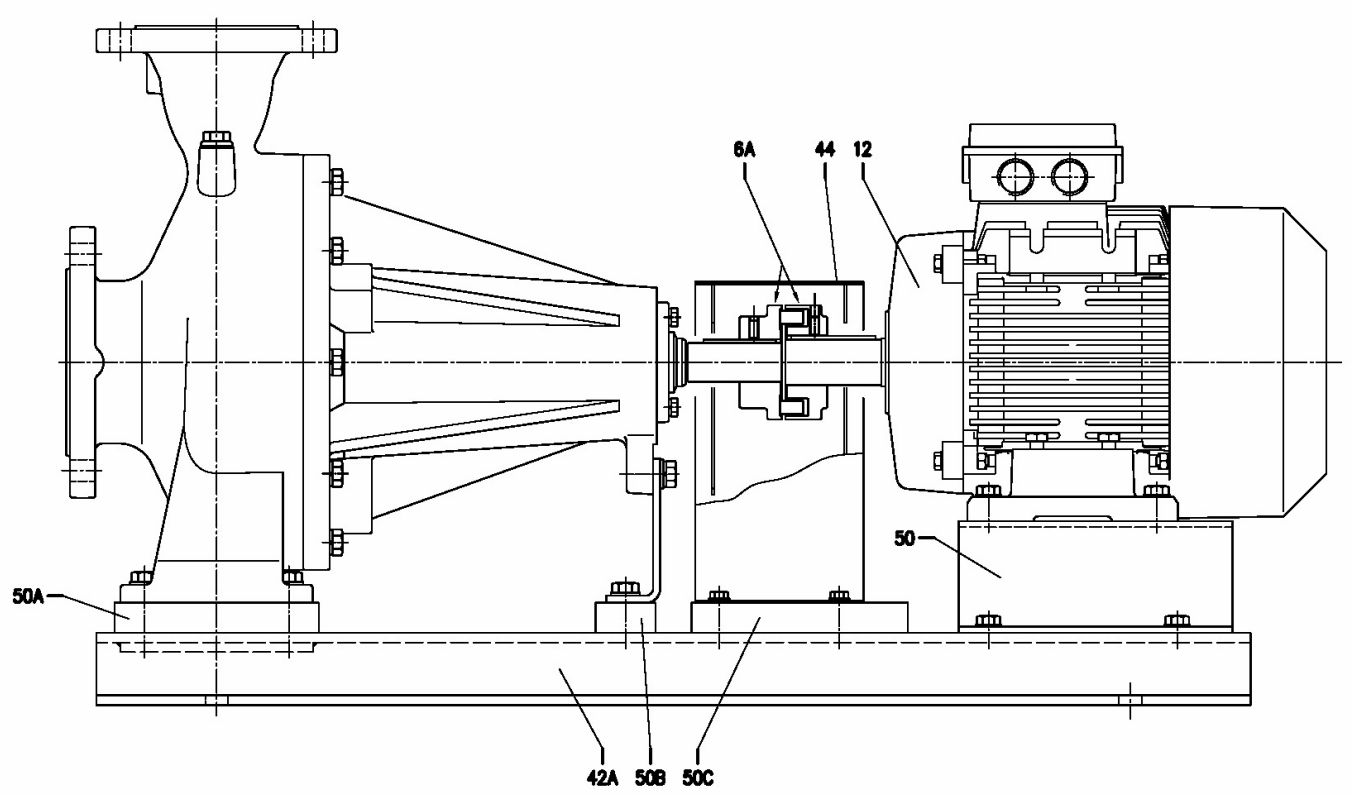

(4/4)
Construction

Pump name 3LP 65-250/306

Customer	Date	2024-06-20	Company
Contact	Item no.		Issued by
Phone	Project		Phone
E-mail	Project ID	Proiect redenumit 2024-06-20 10:03:09	E-mail

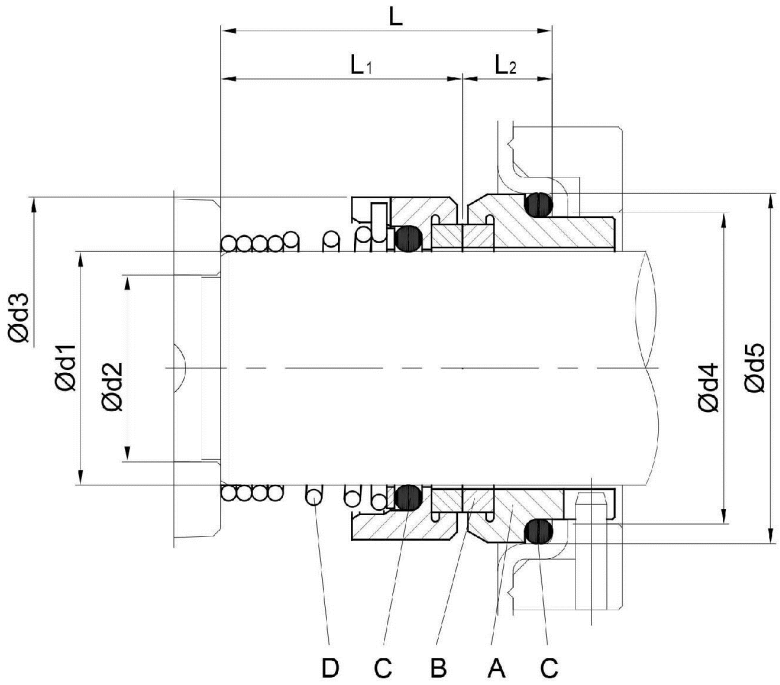

Version	Pump type	Dimensions [mm]								Material Standard			
		d1	d2	d3	d4	d5	L	L1	L2	A Stationary seal ring	B Rotary seal ring	C O-ring	D Frame + spring
L	65-160/156 65-200 65-250 80-160/200	30	24	44	39	45	42.5	31	11	SiC	SiC	FPM	EN 1.4401 (AISI 316)