Technical Data

Pump Name EVMS32 10-0LF5HQ1BEG E/18.5

Customer		Date	2024-06-14	Company	
Contact		Item no.		Issued by	
Phone		Project		Phone	
E-mail		Project ID	Proiect redenumit 2024-06-14 09:53:20	E-mail	

Requested data

1	Pump type		VERTICAL MULTISTAGE PUMP	Fluid		Water
2	Number of pumps / Reserve		1 / 0	Liquid temperature	°C	20
3	Flow	m³/h		Kin. viscosity	mm²/s	1.005
4	Head	m		Vapour pressure	bar	0.0234
5	Geodetic head	m		PH value		
6	Inlet pressure (pin)	bar	0	Density	kg/m³	998.3
7	Available system NPSH			Solids	Weight %	0
8	Ambient temperature	°C	20			

Pump

9	Pump Name		EVMS32 10-0LF5HQ1BEG E/18.5	Frequency		Hz	50
10	Design		VERTICAL MULTISTAGE PUMP	Installation type			Loose flange
11	Manufacturer		EBARA	Impeller Diameter	Max.	mm	118
12	Speed	rpm	2950		Designed	mm	118
13	No. of Stage		10		Min.	mm	118
14	Connection	Suction side		Flow	Operating	m³/h	
15	Connection	Discharge side			Max-	m³/h	42
16	Max Working Pressure	bar	25		Min-	m³/h	12
17	Shut-off head	bar	21.14	Head	Operating	m	
18	Total weight	kg	See the table of "Dimensions".		- (Qmax.)	m	104.5
19	Shaft power	kW			- (Qmin.)	m	205.9
20				Max. Shaft Power at max. impeller		kW	18.10
21	Required pump NPSH	m		Efficiency		%	

Materials

22	Impeller	AISI 304		
23	Intermediate casing	AISI 304		
24	Bottom casing	EN 1.4308 (ASTM CF8)		
25	Casing cover	AISI 304		
26	Shaft	AISI 304		
27	O-ring	EPDM		

Motor

28	Manufacturer		ATB	Insulation class		F
29	Type		TEFC_EVMS32 10-0/18.5_400_Three Phase	Phases		3~
30	Specific design		IE3 / 50 Hz / Pole pairs 1	Frame size		160
31	Rated power	kW	18.5	Weight	kg	109
32	Number of poles		2	Electric voltage	V	400
33	Speed	rpm	2955	Electric current	A	32.8
34	Degree of protection		IP56			
35						

Remarks

EBARA

Performance Curve

Pump Name EVMS32 10-0LF5HQ1BEG E/18.5

Customer	Date	2024-06-14		Company	
Contact	Item no.			Issued by	
Phone	Project			Phone	
E-mail	Project ID	Proiect redenumit 2024-06-14 09:53:20		E-mail	

Requested data

1	Flow	m³/h	
2	Head	m	
3	Geodetic head	m	

Pump

Operating flow	m³/h		Frequency	Hz	50
Operating head	m		Number of poles		2
Impeller diameter designed	mm	118	Speed	rpm	2950

Test standard: ISO 9906:2012 - Grade3B

Water; 20°C; 998.3kg/m³; 1mm²/s

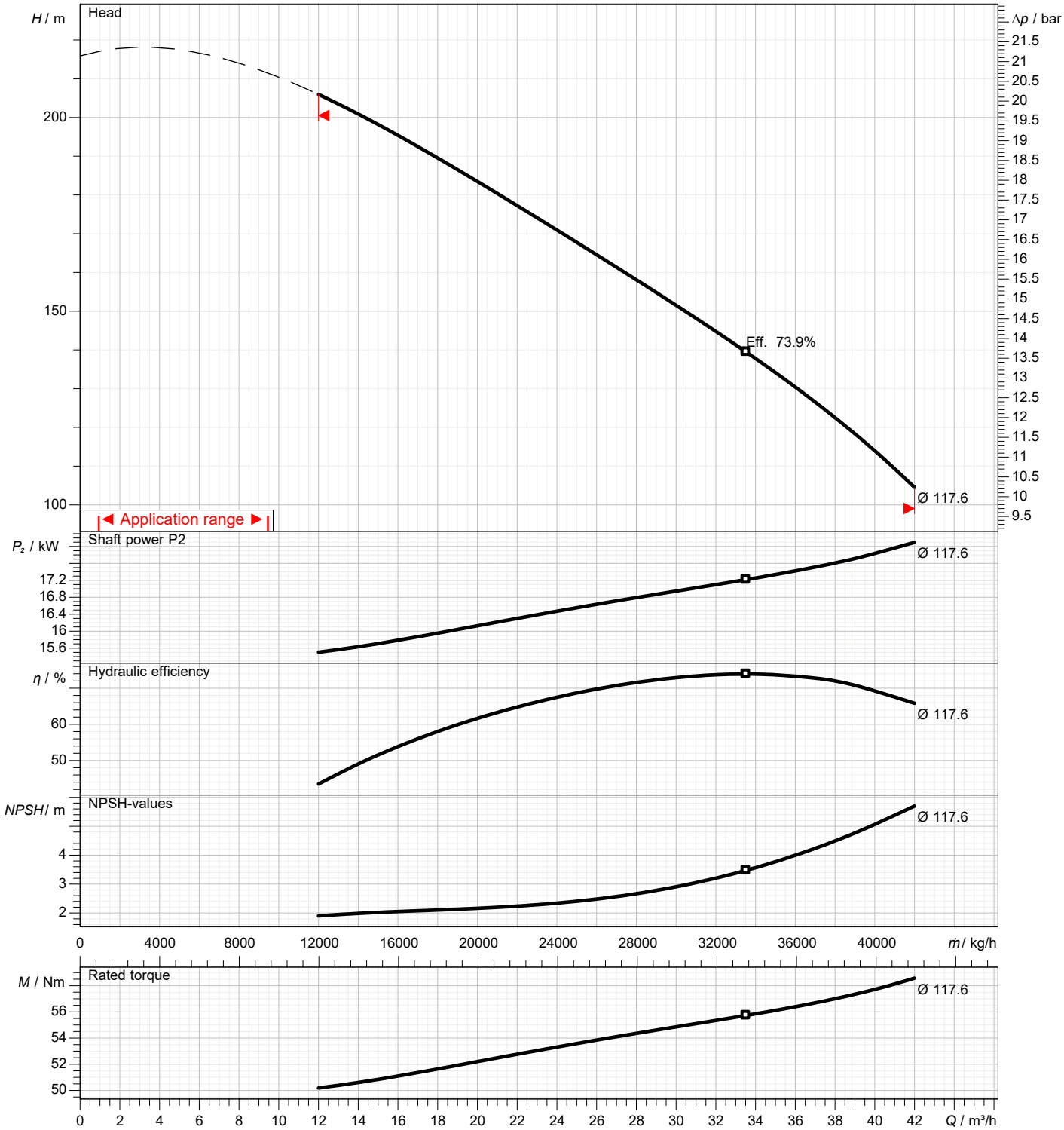

EBARA

Dimensions

Pump Name EVMS32 10-0LF5HQ1BEG E/18.5

Customer	Date 2024-06-14		Company
Contact	Item no.		Issued by
Phone	Project		Phone
E-mail	Project ID	Proiect redenumit 2024-06-14 09:53:20	E-mail

Loose round flange (LF) - DN65

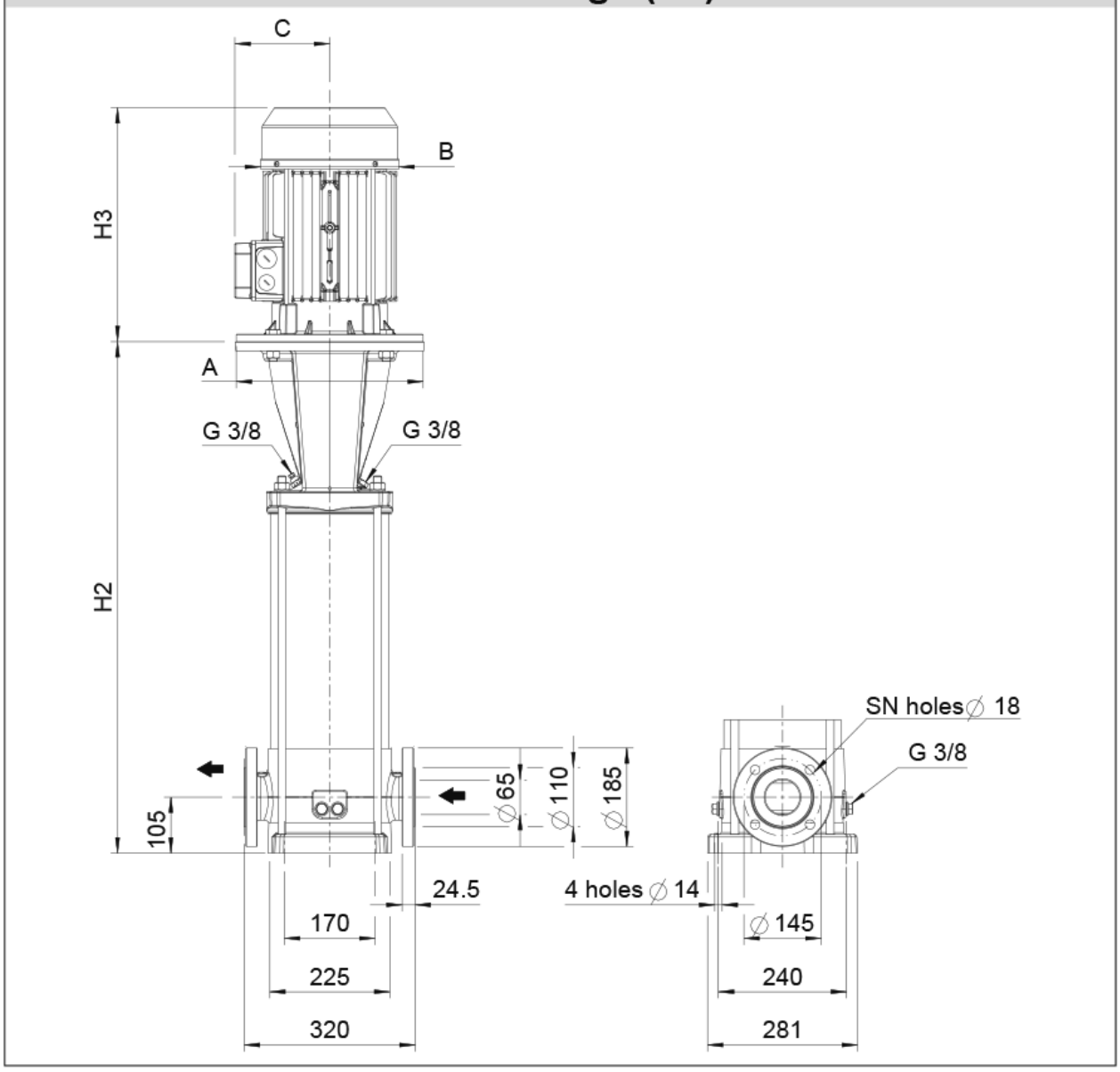

Dimensions in	mm							
1	A	Dia350						
2	B	311						
3	C	240						
4	H2	1225						
5	H2+H3	1720						
6	SN	8						
7	Weight P&M (kg)	206.3						
8								
9								
10								
11								
12								
13								
14								
15								

EBARA

(1/3)
Construction

Pump Name EVMS32 10-0LF5HQ1BEG E/18.5

Customer	Date	2024-06-14	Company
Contact	Item no.		Issued by
Phone	Project		Phone
E-mail	Project ID	Proiect redenumit 2024-06-14 09:53:20	E-mail

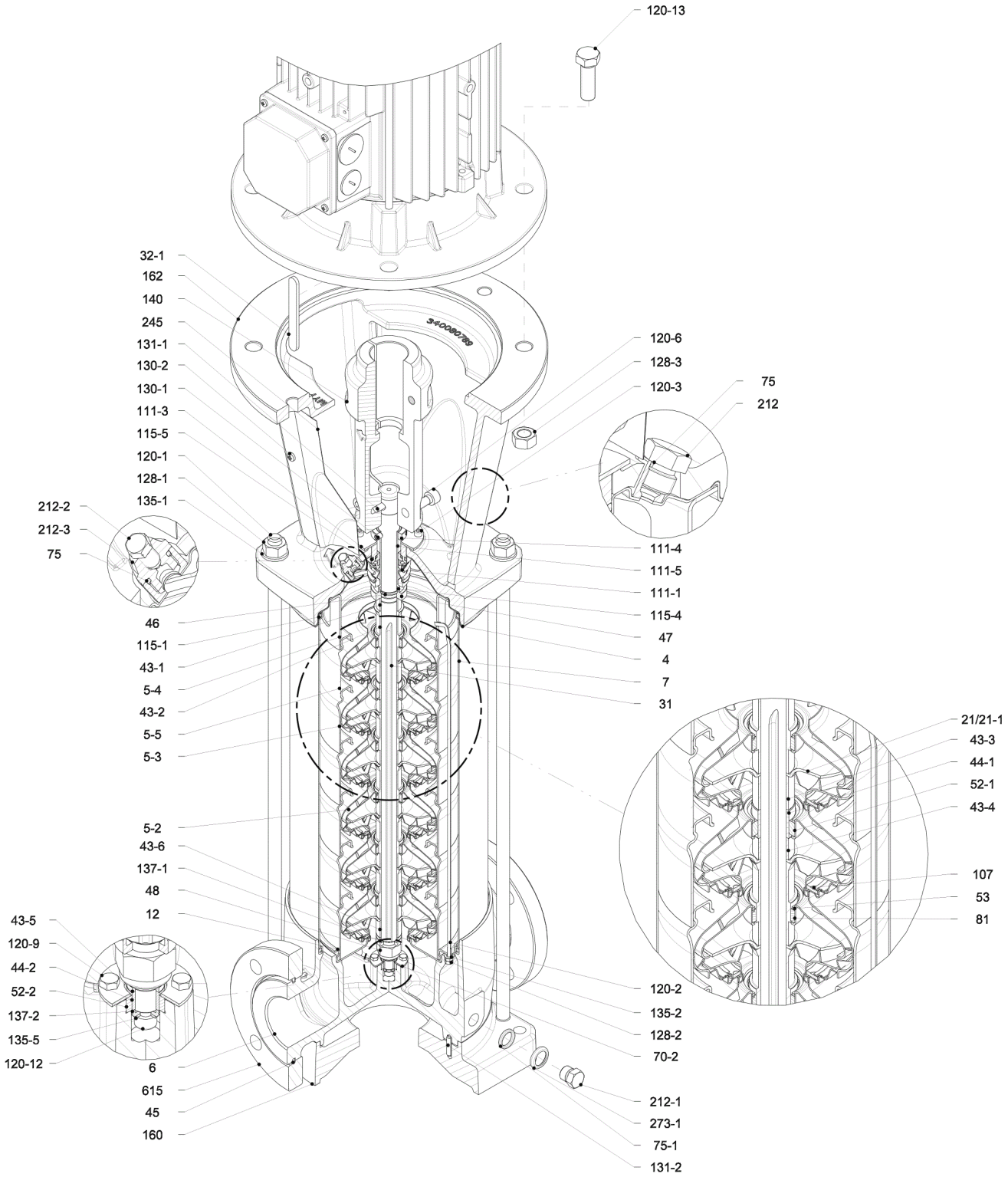

(2/3)
Construction

Pump Name EVMS32 10-0LF5HQ1BEG E/18.5

Customer	Date	2024-06-14	Company	
Contact	Item no.		Issued by	
Phone	Project		Phone	
E-mail	Project ID	Proiect redenumit 2024-06-14 09:53:20	E-mail	

N°	PART NAME	MATERIAL		DIMENSIONS	STANDARD	QTY
		EVMS	EVMSL			
4	Casing cover	EN 1.4301 (AISI 304)	EN 1.4404 (AISI 316L)			1
5-2	Intermediate casing	EN 1.4301 (AISI 304)	EN 1.4404 (AISI 316L)			8
5-3	Intermediate casing with bearing	EN 1.4301 (AISI 304)	EN 1.4404 (AISI 316L)			1
5-4	Discharge casing	EN 1.4301 (AISI 304)	EN 1.4404 (AISI 316L)			1
5-5	Top intermediate casing	EN 1.4301 (AISI 304)	EN 1.4404 (AISI 316L)			1
6	Bottom casing	EN 1.4308 (ASTM CF8)	EN 1.4408 (ASTM CF8M)			1
7	Outer casing	EN 1.4301 (AISI 304)	EN 1.4404 (AISI 316L)			1
12	Suction cover	EN 1.4301 (AISI 304)	EN 1.4404 (AISI 316L)			1
21	Impeller	EN 1.4301 (AISI 304)	EN 1.4404 (AISI 316L)			10
31	Shaft	EN 1.4301 (AISI 304)	EN 1.4404 (AISI 316L)			1
32-1	Adjuster key	EN 1.4301 (AISI 304)				1
43-1	Shaft sleeve (mechanical seal)	EN 1.4301 (AISI 304)	EN 1.4404 (AISI 316L)			1
43-2	Shaft sleeve (intermediate)	EN 1.4301 (AISI 304)	EN 1.4404 (AISI 316L)			9
43-3	Shaft sleeve (bearing)	EN 1.4301 (AISI 304)	EN 1.4404 (AISI 316L)			1
43-4	Shaft sleeve (adjustment)	EN 1.4301 (AISI 304)	EN 1.4404 (AISI 316L)			1
43-5	Shaft sleeve (last stage)	EN 1.4301 (AISI 304)	EN 1.4404 (AISI 316L)			1
43-6	Shaft sleeve (adjustment)	EN 1.4301 (AISI 304)	EN 1.4404 (AISI 316L)			1
44-1	Shaft sleeve bearing	Tungsten carbride				1
44-2	Shaft sleeve (bearing)	Tungsten carbride				1
45	Flange holder	EN 1.4301 (AISI 304)				4
46	Ring (mechanical seal)	EN 1.4404 (AISI 316L)				1
47	Ring holder	EN 1.4404 (AISI 316L)				1
48	Impeller nut	EN 1.4301 (AISI 304) with inox insert	EN 1.4401 (AISI 316) with inox insert			1
52-1	Sleeve bearing	Tungsten carbride				1
52-2	Sleeve bearing (bottom casing)	Tungsten carbride				1
53	Bush holder	EN 1.4301 (AISI 304)	EN 1.4404 (AISI 316L)			10
70-2	Ring for bearing sleeve	EN 1.4301 (AISI 304)	EN 1.4404 (AISI 316L)			1
75	O-Ring (priming plug)	EPDM / FPM *		Ø12.37x2.62	OR 3050	2
75-1	O-Ring (drainage plug)	EPDM / FPM *				4
81	Bush	PTFE				9
107	Liner ring	EN 1.4301 (AISI 304) + PPS	EN 1.4404 (AISI 316L) + PPS			10
111-1	Mechanical seal	- - - **				1
111-3	Mechanical seal seat	EN 1.4301 (AISI 304)	EN 1.4401 (AISI 316)			1
111-4	Seal holder	EN 1.4404 (AISI 316L)				1
111-5	Mechanical seal cartridge sleeve	EN 1.4301 (AISI 304)	EN 1.4404 (AISI 316L)			1
115-1	O-Ring (outer casing)	EPDM / FPM *		Ø240.66x5.34	OR 6945	2
115-4	O-Ring (cartridge sleeve)	EPDM / FPM *		Ø23.39x3.53	OR 4093	1
115-5	O-Ring (seal flange)	EPDM / FPM *		Ø44.04x3.53	OR 4175	1
120-1	Tie rod	EN 1.4057 (AISI 431)				4
120-2	Tie rod (stage)	EN 1.4301 (AISI 304)	EN 1.4401 (AISI 316)			2
120-3	Screw (seal flange)	A2-70		M5x12	ISO 4762	4
120-6	Screw (pump coupling) above 11 kW	Galvanized steel 8.8 strength class ISO 898/1		M10x30	ISO 4762	4
120-9	Screw (bottom casing)	A2-70		M5x8	ISO 4017	4
120-12	Screw (shaft)	A2-70		M6x16	ISO 4762	1
120-13	Screw for motor MEC 160-180	Galvanized steel 8.8 strength class ISO 898/1		M16x50	ISO 4017	4
128-1	Nut (tie rod)	A2-70		M16	ISO 4032	4
128-2	Nut (casing tie rod)	A2-70		M5	ISO 4032	4
128-3	Nut (motor) MEC 160-180-200	Galvanized steel		M16	ISO 4032	4
130-1	Set screw	EN 1.4301 (AISI 304)		M6x8	ISO 4026	3
130-2	Screw for coupling guard	A2-70		M5x6	UNI 7687	4
131-1	Pin for shaft above 5.5 kW	Carbon Steel		Ø8X50	ISO 2338	1
131-2	Elastic pin	EN 1.4301 (AISI 304)		Ø6x26	ISO 8752	1
135-1	Washer (tie rod)	EN 1.4301 (AISI 304)		Ø16	ISO 7089	4
135-2	Washer (casing tie rod)	EN 1.4301 (AISI 304)	EN 1.4404 (AISI 316)	Ø5.1	UNI 1751	2
135-5	Washer (impeller nut)	EN 1.4301 (AISI 304)	EN 1.4404 (AISI 316L)			1
137-1	Impeller spacer	EN 1.4301 (AISI 304)	EN 1.4404 (AISI 316L)			1
137-2	Shaft spacer	EN 1.4301 (AISI 304)	EN 1.4404 (AISI 316L)			1
140	Coupling from 5.5 kW to 30 kW	Cast Iron EN GJL250 EN 1561				2
160	Base	Cast Iron EN GJL200 EN 1561				1
162	Motor bracket up to 30 kW	Cast Iron EN GJS 400-15 EN 1563				1
212	Priming plug	EN 1.4301 (AISI 304)	EN 1.4404 (AISI 316L)			1
212-1	Drainage plug	EN 1.4301 (AISI 304)	EN 1.4404 (AISI 316L)			4
212-2	Venting plug	EN 1.4401 (AISI 316)				1
212-3	Priming plug	EN 1.4301 (AISI 304)	EN 1.4404 (AISI 316L)			1
245	Coupling guard	EN 1.4301 (AISI 304)				2
273-1	Washer (drainage plug)	EN 1.4301 (AISI 304)	EN 1.4404 (AISI 316L)			4
615	Loose flange	Cast Iron EN GJS 500-7 EN 1563				2

* EPDM (standard)
FPM (option)

** see CONSTRUCTION 3/3

(3/3)
Construction

Pump Name EVMS32 10-0LF5HQ1BEG E/18.5

Customer	Date 2024-06-14		Company
Contact	Item no.		Issued by
Phone	Project		Phone
E-mail	Project ID	Proiect redenumit 2024-06-14 09:53:20	E-mail

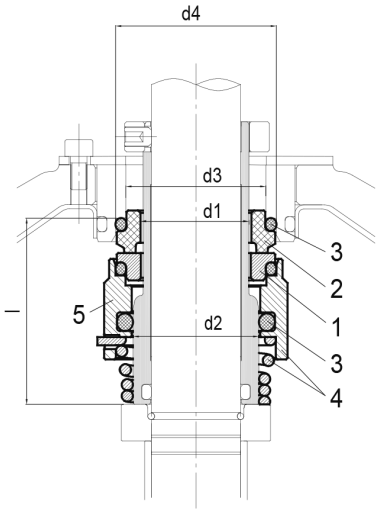

● Standard

Type key	Availability	Max operating pressure	Max operating temperature	Shaft seal type		Shaft seal material								
				Cartridge		1		2		3		4	5	
				Type	Code	Rotating part	Code	Stationary part	Code	Elastomers	Code	Compression spring	Collar	Code
HQ1BEG	●	25/35 bar	- 30°C to + 140°C	Balanced	(H)	SiC	(Q1)	Carbon	(B)	EPDM	(E)	AISI 316		(G)

Max operating pressure	d1 [mm]	d2 [mm]	d3 [mm]	d4 [mm]	l [mm]
25 bar	28	33	37	43	50