Technical Data

Pump Name EVMSG5 5N5Q1BEG/1.1

Customer	Date	2024-06-14	Company	
Contact	Item no.		Issued by	
Phone	Project		Phone	
E-mail	Project ID	Proiect redenumit 2024-06-14 15:41:37	E-mail	

Requested data

1	Pump type		VERTICAL MULTISTAGE PUMP	Fluid		Water
2	Number of pumps / Reserve		1 / 0	Liquid temperature	°C	20
3	Flow	m³/h		Kin. viscosity	mm²/s	1.005
4	Head	m		Vapour pressure	bar	0.0234
5	Geodetic head	m		PH value		
6	Inlet pressure (pin)	bar	0	Density	kg/m³	998.3
7	Available system NPSH			Solids	Weight %	0
8	Ambient temperature	°C	20			

Pump

9	Pump Name		EVMSG5 5N5Q1BEG/1.1	Frequency		Hz	50
10	Design		VERTICAL MULTISTAGE PUMP	Installation type			Oval flange (STANDARD)
11	Manufacturer		EBARA	Impeller Diameter	Max.	mm	91
12	Speed	rpm	2850		Designed	mm	91
13	No. of Stage		5		Min.	mm	91
14	Connection Suction side			Flow	Operating	m³/h	
15	Connection Discharge side				Max-	m³/h	7.8
16	Max Working Pressure	bar	16		Min-	m³/h	2.4
17	Shut-off head	bar	4.49	Head	Operating	m	
18	Total weight	kg	See the table of "Dimensions".		- (Qmax.)	m	23.8
19	Shaft power	kW			- (Qmin.)	m	43.3
20				Max. Shaft Power at max. impeller		kW	0.93
21	Required pump NPSH	m		Efficiency		%	

Materials

22	Impeller	AISI 304		
23	Intermediate casing	AISI 304		
24	Bottom casing	Cast iron		
25	Shaft	AISI 304		
26	O-ring	EPDM		
27				

Motor

28	Manufacturer		ETM	Insulation class		F
29	Type		TEFC_EVMS5 5/1.1_230_Three Phase	Phases		3~
30	Specific design		IE3 / 50 Hz / Pole pairs 1	Frame size		80
31	Rated power	kW	1.1	Weight	kg	10
32	Number of poles		2	Electric voltage	V	230
33	Speed	rpm	2830	Electric current	A	4.3
34	Degree of protection		IP 55			
35						

Remarks

EBARA

Performance Curve

Pump Name EVMSG5 5N5Q1BEG/1.1

Customer	Date	2024-06-14		Company	
Contact	Item no.			Issued by	
Phone	Project			Phone	
E-mail	Project ID	Proiect redenumit 2024-06-14 15:41:37		E-mail	

Requested data

1	Flow	m³/h	
2	Head	m	
3	Geodetic head	m	

Pump

Operating flow	m³/h		Frequency	Hz	50
Operating head	m		Number of poles		2
Impeller diameter designed	mm	91	Speed	rpm	2850

Test standard: ISO 9906:2012 - Grade3B

Water; 20°C; 998.3kg/m³; 1mm²/s

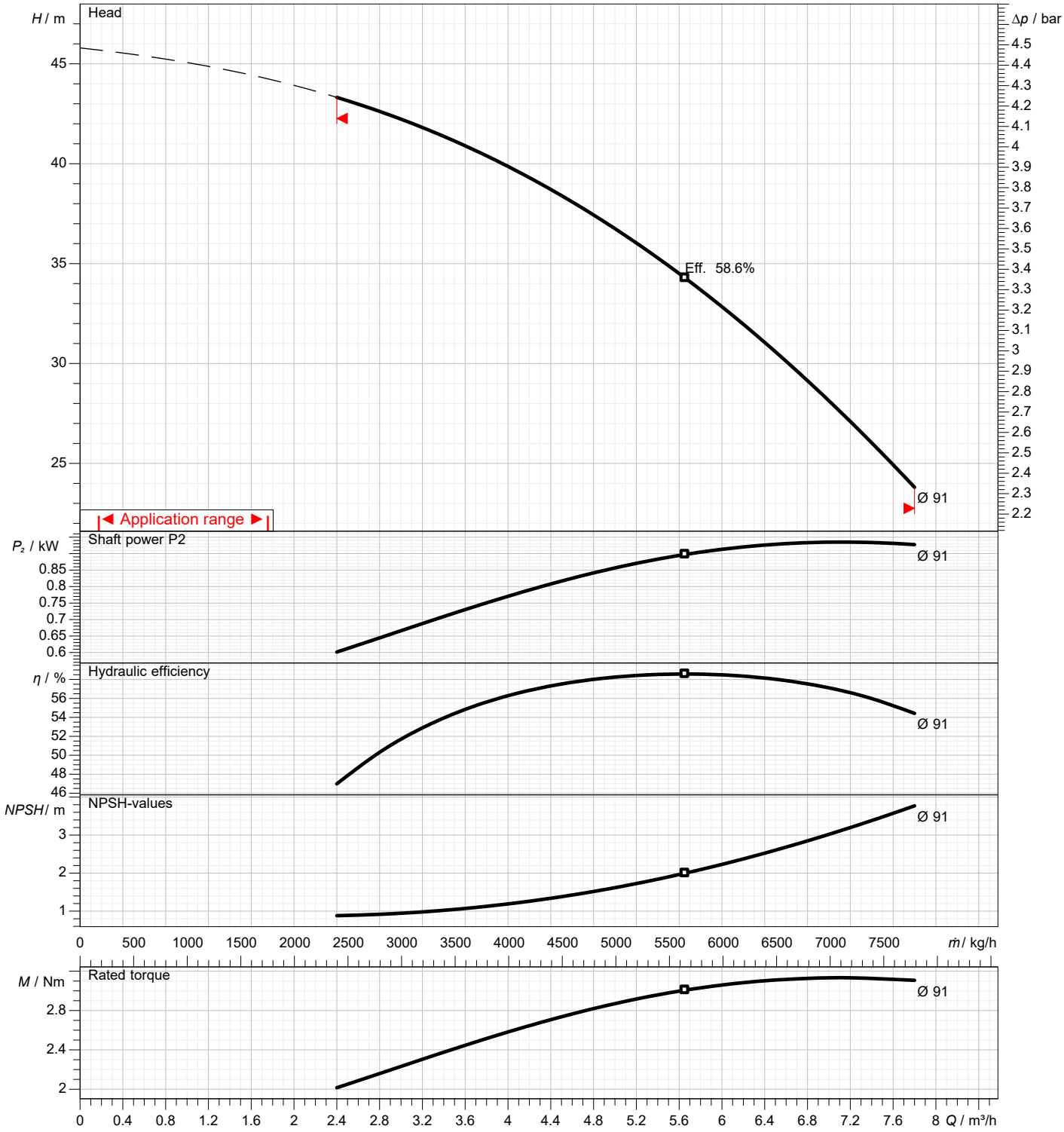

EBARA

Dimensions

Pump name EVMSG5 5N5Q1BEG/1.1

Customer	Date	2024-06-14	Company
Contact	Item no.		Issued by
Phone	Project		Phone
E-mail	Project ID	Proiect redenumit 2024-06-14 15:41:37	E-mail

Oval flange (N)

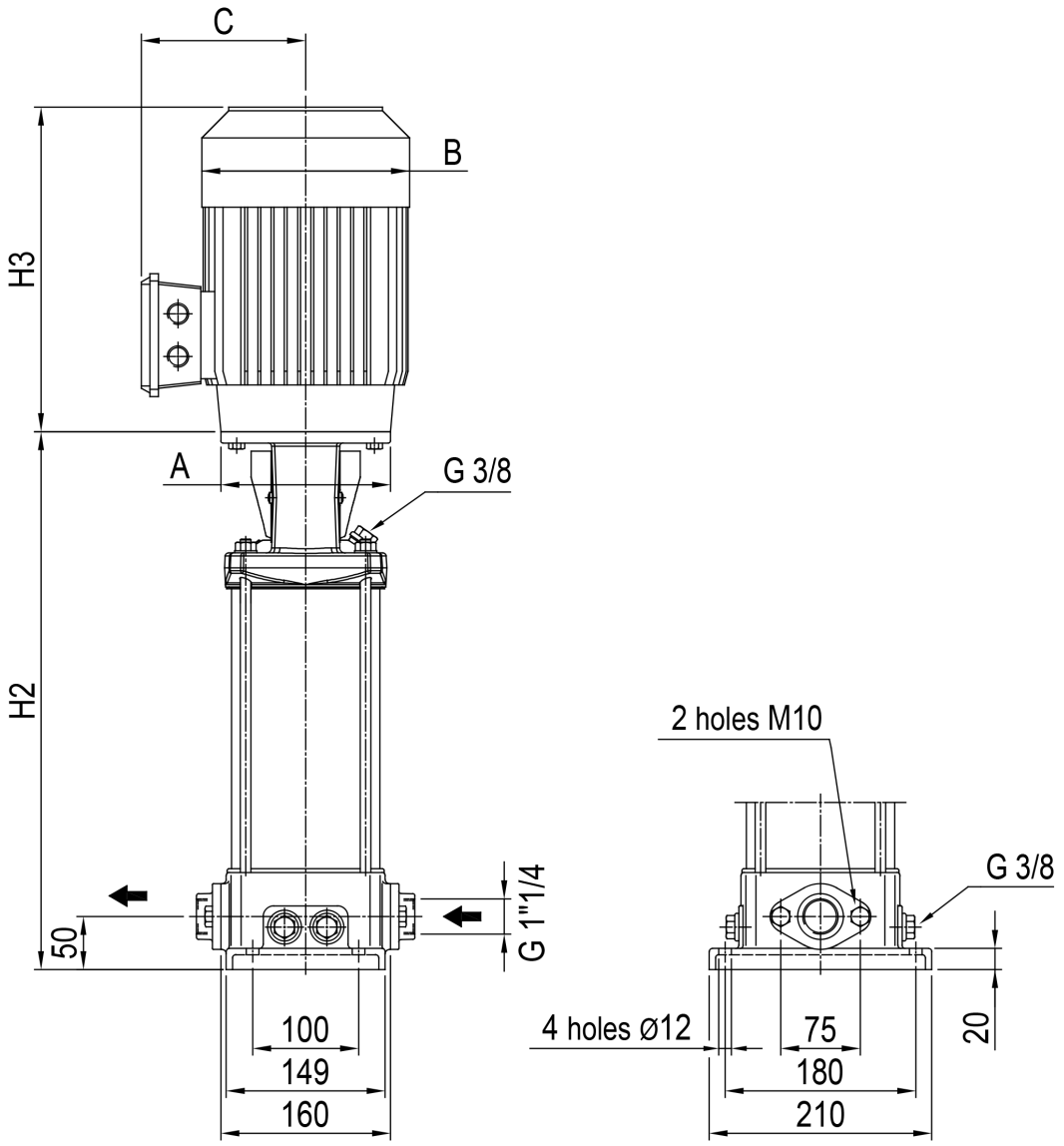

Dimensions in	mm							
1	A	Dia120						
2	B	141						
3	C	102						
4	H2	358						
5	H3	244						
6	Weight P&M (kg)	25						
7								
8								
9								
10								
11								
12								
13								
14								
15								

EBARA

(1/4)
Construction

Pump name EVMSG5 5N5Q1BEG/1.1

Customer	Date	2024-06-14	Company
Contact	Item no.		Issued by
Phone	Project		Phone
E-mail	Project ID	Proiect redenumit 2024-06-14 15:41:37	E-mail

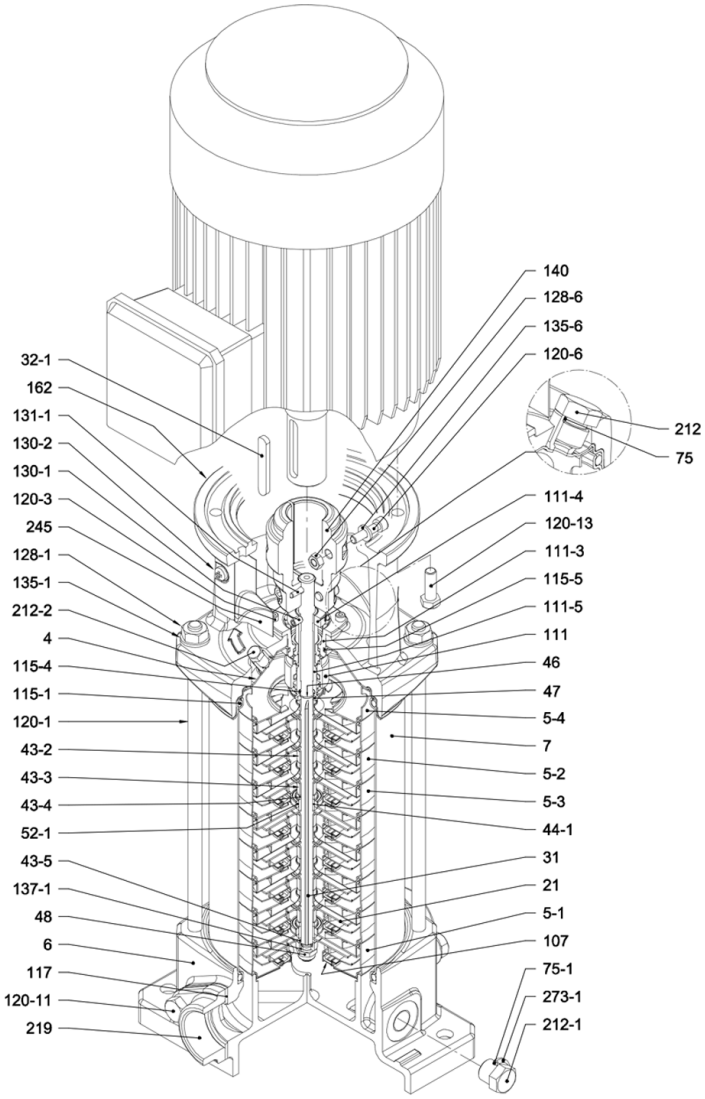

with Oval flange (N)

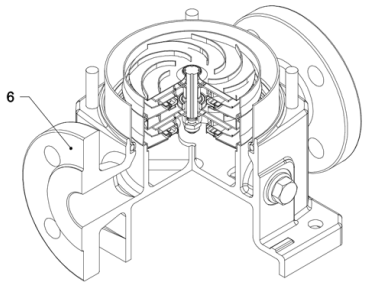

with Round flange (F)

(2/4)
Construction

Pump name EVMSG5 5N5Q1BEG/1.1

Customer	Date	2024-06-14	Company	
Contact	Item no.		Issued by	
Phone	Project		Phone	
E-mail	Project ID	Proiect redenumit 2024-06-14 15:41:37	E-mail	

N°	PART NAME		MATERIAL EVMSG	DIMENSIONS	STANDARD
4	Casing cover		EN 1.4301 (AISI 304)		
5-1	Suction casing		EN 1.4301 (AISI 304)		
5-2	Intermediate casing		EN 1.4301 (AISI 304)		
5-3	Intermediate casing with bearing		EN 1.4301 (AISI 304)		
5-4	Discharge casing		EN 1.4301 (AISI 304)		
6	Bottom casing		Cast Iron EN GJL-250EE1551		
7	Outer casing		EN 1.4301 (AISI 304)		
21	Impeller		EN 1.4301 (AISI 304)		
31	Shaft		EN 1.4301 (AISI 304) - EN 1.4462 (AISI 329A)		
32-1	Adjuster key		EN 1.4301 (AISI 304)		
43-2	Shaft sleeve (intermediate)		EN 1.4301 (AISI 304)		
43-3	Shaft sleeve (bearing)		EN 1.4301 (AISI 304)		
43-4	Shaft sleeve (adjustment)		EN 1.4404 (AISI 316L)		
43-5	Shaft sleeve (last stage)		EN 1.4301 (AISI 304)		
44-1	Shaft sleeve bearing		Tungsten carbide		
46	Ring (mechanical seal)		EN 1.4404 (AISI 316L)		
47	Ring holder		EN 1.4404 (AISI 316L)		
48	Impeller nut		EN 1.4301 (AISI 304) with inox insert	M8	
52-1	Sleeve bearing		Tungsten carbide		
75	O-Ring (priming plug)		EPDM / FPM *	Ø12.37x2.62	OR 3050
75-1	O-Ring (drainage plug)		EPDM / FPM *		
107	Liner ring		EN 1.4301 (AISI 304) + PPS		
111	Mechanical seal		- - - **		
111-3	Mechanical seal seat		EN 1.4308 (ASTM CF8)		
111-4	Seal holder		EN 1.4301 (AISI 304)		
111-5	Mechanical seal cartridge sleeve		EN 1.4301 (AISI 304)		
115-1	O-Ring (outer casing)		EPDM / FPM *	Ø129.54x5.34	OR 6945
115-4	O-Ring (cartridge sleeve)		EPDM / FPM *	Ø11.91x2.62	OR 4093
115-5	O-Ring (seal flange)		EPDM / FPM *	Ø32.99x2.62	OR 4175
117	Flange gasket		EPDM / FPM *		
120-1	Tie-rod		EN 1.4057 (AISI 431)	M10	
120-3	Screw (seal flange)		A2-70	M4x10	ISO 4762
120-6	Screw (pump coupling)	up to 4.0 kW	Galvanized steel	M6x25	ISO 4762
		above 5.5 kW		M8x20	ISO 4762
120-11	Screw (counterflange)		A2-70		
120-13	Screw for motor	MEC 71-80	Galvanized steel 8.8 strength class ISO 898/1	M6x20	ISO 4017
		MEC 90-100-112		M8x20	ISO 4017
		MEC 132		M12x40	ISO 4017
128-1	Nut (tie rod)		A2-70	M10	ISO 4032
128-3	Nut (motor)	MEC 132	Galvanized steel	M12	ISO 4032
128-6	Nut (aluminium coupling)	MEC 71-80-90-100-112	Galvanized steel	M6	ISO 4032
130-1	Set screw		EN 1.4301 (AISI 304)	M5x8	ISO 4026
130-2	Screw for coupling guard		A2-70	M5x6	UNI 7687
131-1	Pin for shaft		Carbon Steel	Ø4x32	ISO 2338
135-1	Washer (tie rod)		EN 1.4301 (AISI 304)	Ø10.5x21x2	ISO 7089
135-6	Washer (aluminium coupling)	up to 4.0 kW	Carbon Steel	Ø6	
137-1	Impeller spacer		EN 1.4301 (AISI 304)		
140	Coupling	up to 4.0 kW	Die cast Aluminium EN AB-AISI11Cu2 (Fe)		
		above 5.5 kW	Cast Iron		
162	Motor bracket		Cast iron EN-GJL-250		
212	Priming plug		EN 1.4301 (AISI 304)	G 3/8	
212-1	Drainage plug		EN 1.4301 (AISI 304)	G 3/8	
212-2	Venting plug		EN 1.4404 (AISI 316L)		
219	Counter flange		Galvanized steel		
245	Coupling guard		EN 1.4301 (AISI 304)		
273-1	Washer (drainage plug)		EN 1.4301 (AISI 304)		

* EPDM (standard)
FPM (option)

** see CONSTRUCTION 4/4

(3/4)
Construction

Pump name EVMSG5 5N5Q1BEG/1.1

Customer	Date	2024-06-14	Company	
Contact	Item no.		Issued by	
Phone	Project		Phone	
E-mail	Project ID	Proiect redenumit 2024-06-14 15:41:37	E-mail	

Pump Type	N°																												
	4	5-1	5-2	5-3	5-4	6	7	21	31***	32-1	43-2	43-3	43-4	43-5	44-1	46	47	48	52-1	75	75-1	107	111	111-3	111-4	111-5	115-1	115-4	115-5
EVMSG5 2/0.37	1	1	/	1	1	1	1	2	1	1	1	1	1	/	1	2	1	1	1	1	4	2	1	1	1	1	2	1	1
EVMSG5 3/0.55	1	1	1	1	1	1	1	3	1	1	3	1	1	1	1	2	1	1	1	1	4	3	1	1	1	1	2	1	1
EVMSG5 4/0.75	1	1	2	1	1	1	1	4	1	1	5	1	1	/	1	2	1	1	1	1	4	4	1	1	1	1	2	1	1
EVMSG5 5/1.1	1	1	3	1	1	1	1	5	1	1	7	1	1	/	1	2	1	1	1	1	4	5	1	1	1	1	2	1	1
EVMSG5 6/1.5	1	1	4	1	1	1	1	6	1	1	9	1	1	1	1	2	1	1	1	1	4	6	1	1	1	1	2	1	1
EVMSG5 7/1.5	1	1	5	1	1	1	1	7	1	1	11	1	1	/	1	2	1	1	1	1	4	7	1	1	1	1	2	1	1
EVMSG5 8/2.2	1	1	6	1	1	1	1	8	1	1	13	1	1	/	1	2	1	1	1	1	4	8	1	1	1	1	2	1	1
EVMSG5 9/2.2	1	1	7	1	1	1	1	9	1	1	15	1	1	1	1	2	1	1	1	1	4	9	1	1	1	1	2	1	1
EVMSG5 10/2.2	1	1	8	1	1	1	1	10	1	1	17	1	1	/	1	2	1	1	1	1	4	10	1	1	1	1	2	1	1
EVMSG5 11/2.2	1	1	8	2	1	1	1	11	1	1	17	2	2	/	2	2	1	1	2	1	4	11	1	1	1	1	2	1	1
EVMSG5 12/3.0	1	1	9	2	1	1	1	12	1	1	19	2	2	1	2	2	1	1	2	1	4	12	1	1	1	1	2	1	1
EVMSG5 13/3.0	1	1	10	2	1	1	1	13	1	1	21	2	2	/	2	2	1	1	2	1	4	13	1	1	1	1	2	1	1
EVMSG5 14/3.0	1	1	11	2	1	1	1	14	1	1	23	2	2	/	2	2	1	1	2	1	4	14	1	1	1	1	2	1	1
EVMSG5 15/3.0	1	1	12	2	1	1	1	15	1	1	25	2	2	1	2	2	1	1	2	1	4	15	1	1	1	1	2	1	1
EVMSG5 17/4.0	1	1	14	2	1	1	1	17	1	1	29	2	2	/	2	2	1	1	2	1	4	17	1	1	1	1	2	1	1
EVMSG5 19/4.0	1	1	16	2	1	1	1	19	1	1	33	2	2	/	2	2	1	1	2	1	4	19	1	1	1	1	2	1	1
EVMSG5 20/4.0	1	1	17	2	1	1	1	20	1	1	35	2	2	/	2	2	1	1	2	1	4	20	1	1	1	1	2	1	1
EVMSG5 23/5.5	1	1	20	2	1	1	1	23	1	1	41	2	2	/	2	2	1	1	2	1	4	23	1	1	1	1	2	1	1
EVMSG5 25/5.5	1	1	22	2	1	1	1	25	1	1	45	2	2	/	2	2	1	1	2	1	4	25	1	1	1	1	2	1	1
EVMSG5 27/5.5	1	1	23	3	1	1	1	27	1	1	47	3	3	/	3	2	1	1	3	1	4	27	1	1	1	1	2	1	1

Pump Type	N°																						
	117*	120-1	120-3	120-6	120-11*	120-13	128-1	128-3	128-6	130-1	130-2	131-1	135-1	135-6	137-1	140	162	212	212-1	212-2	219*	245	273-1
EVMSG5 2/0.37	2	4	4	4	4	4	4	/	4	3	4	1	4	4	1	2	1	1	4	1	2	2	4
EVMSG5 3/0.55	2	4	4	4	4	4	4	/	4	3	4	1	4	4	1	2	1	1	4	1	2	2	4
EVMSG5 4/0.75	2	4	4	4	4	4	4	/	4	3	4	1	4	4	1	2	1	1	4	1	2	2	4
EVMSG5 5/1.1	2	4	4	4	4	4	4	/	4	3	4	1	4	4	1	2	1	1	4	1	2	2	4
EVMSG5 6/1.5	2	4	4	4	4	4	4	/	4	3	4	1	4	4	1	2	1	1	4	1	2	2	4
EVMSG5 7/1.5	2	4	4	4	4	4	4	/	4	3	4	1	4	4	1	2	1	1	4	1	2	2	4
EVMSG5 8/2.2	2	4	4	4	4	4	4	/	4	3	4	1	4	4	1	2	1	1	4	1	2	2	4
EVMSG5 9/2.2	2	4	4	4	4	4	4	/	4	3	4	1	4	4	1	2	1	1	4	1	2	2	4
EVMSG5 10/2.2	2	4	4	4	4	4	4	/	4	3	4	1	4	4	1	2	1	1	4	1	2	2	4
EVMSG5 11/2.2	2	4	4	4	4	4	4	/	4	3	4	1	4	4	1	2	1	1	4	1	2	2	4
EVMSG5 12/3.0	2	4	4	4	4	4	4	/	4	3	4	1	4	4	1	2	1	1	4	1	2	2	4
EVMSG5 13/3.0	2	4	4	4	4	4	4	/	4	3	4	1	4	4	1	2	1	1	4	1	2	2	4
EVMSG5 14/3.0	2	4	4	4	4	4	4	/	4	3	4	1	4	4	1	2	1	1	4	1	2	2	4
EVMSG5 15/3.0	2	4	4	4	4	4	4	/	4	3	4	1	4	4	1	2	1	1	4	1	2	2	4
EVMSG5 17/4.0	2	4	4	4	4	4	4	/	4	3	4	1	4	4	1	2	1	1	4	1	2	2	4
EVMSG5 19/4.0	/	4	4	4	/	4	4	/	4	3	4	1	4	4	1	2	1	1	4	1	/	2	4
EVMSG5 20/4.0	/	4	4	4	/	4	4	/	4	3	4	1	4	4	1	2	1	1	4	1	/	2	4
EVMSG5 23/5.5	/	4	4	4	/	4	4	4	/	3	4	1	4	/	1	2	1	1	4	1	/	2	4
EVMSG5 25/5.5	/	4	4	4	/	4	4	4	/	3	4	1	4	/	1	2	1	1	4	1	/	2	4
EVMSG5 27/5.5	/	4	4	4	/	4	4	4	/	3	4	1	4	/	1	2	1	1	4	1	/	2	4

* only for Oval flange (N)

** ☐ shaft in EN 1.4462 (AISI 329A)

128-3: only for motor above 5.5 kW

(4/4)
Construction

Pump name EVMSG5 5N5Q1BEG/1.1

Customer	Date 2024-06-14		Company
Contact	Item no.		Issued by
Phone	Project		Phone
E-mail	Project ID Proiect redenumit 2024-06-14 15:41:37		E-mail

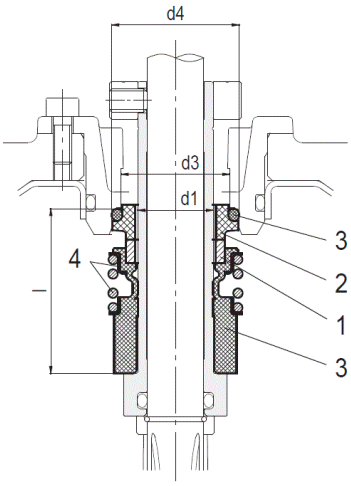

up to 16 bar
Cartridge Unbalanced type

Type key	Availability	Max operating pressure	Max operating temperature	Shaft seal type		Shaft seal material								
				Cartridge		1		2		3		4	5	
				Type	Code	Rotating part	Code	Stationary part	Code	Elastomers	Code	Compression spring	Collar	Code
Q1BEG	●	16 bar	- 30°C to + 120°C	Unbalanced	(-)	SiC	(Q1)	Carbon	(B)	EPDM	(E)	AISI 316		(G)

Pump model	Shaft seal type		Max operating pressure	d1 [mm]	d2 [mm]	d3 [mm]	d4 [mm]	l [mm]
EVMS 1/3/5	Cartridge	Unbalanced	16 bar	16	-	23	27	35
		Balanced	25 bar		20			42.5
EVMS 10/15/20	Cartridge	Unbalanced	16 bar	20	-	29	35	37.5
		Balanced	25 bar		24			45