Technical Data

Pump Name GS4 65-160-177/B/2.2

Customer	Date	2024-06-14	Company	
Contact	Item no.		Issued by	
Phone	Project		Phone	
E-mail	Project ID	Proiect redenumit 2024-06-14 18:50:31	E-mail	

Requested data

1	Pump type		End Suction Volute Pump	Fluid	Water
2	Number of pumps / Reserve		1 / 0	Liquid temperature °C	20
3	Flow	m³/h		Kin. viscosity mm²/s	1.005
4	Head	m		Vapour pressure bar	0.0234
5	Geodetic head	m		PH value	
6	Inlet pressure (pin)	bar	0	Density kg/m³	998.3
7	Available system NPSH			Solids Weight %	0
8	Ambient temperature	°C	20		

Pump

9	Pump Name		GS4 65-160-177/B/2.2	Frequency	Hz	50
10	Design		End Suction Volute Pump	Installation type		with base, motor
11	Manufacturer		EBARA	Impeller Diameter	Max. mm	177
12	Speed	rpm	1450		Designed mm	177
13	No. of Stage		1		Min. mm	135
14	Connection Suction side		EN PN16	Flow	Operating m³/h	
15	Connection Discharge side		EN PN16		Max- m³/h	81.4
16	Max Working Pressure	bar	16		Min- m³/h	10.7
17	Shut-off head	bar	0.98	Head	Operating m	
18	Total weight	kg	See the table of "Dimensions".		- (Qmax.) m	7.5
19	Shaft power	kW			- (Qmin.) m	9.9
20				Max. Shaft Power at max. impeller	kW	2.11
21	Required pump NPSH	m		Efficiency	%	

Materials

22	Casing	Cast iron		
23	Impeller	Cast iron		
24	Shaft	Cr. Steel		
25	Case wear ring	Bronze		
26	O-ring	EPDM		
27	Mechanical seal	SiC/Carbon/EPDM		

Motor

28	Manufacturer		WEG	Insulation class	F
29	Type		100L_2.2_3_400	Phases	3~
30	Specific design		TEFC/B3/IE3/W22 / 50 Hz / Pole pairs 2	Frame size	100L
31	Rated power	kW	2.2	Weight kg	31.5
32	Number of poles		4	Electric voltage V	400
33	Speed	rpm	1435	Electric current A	4.56
34	Degree of protection		IP55		
35					

Remarks

EBARA

Performance Curve

Pump Name GS4 65-160-177/B/2.2

Customer	Date	2024-06-14	Company	
Contact	Item no.		Issued by	
Phone	Project		Phone	
E-mail	Project ID	Proiect redenumit 2024-06-14 18:50:31	E-mail	

Requested data

1	Flow	m³/h	
2	Head	m	
3	Geodetic head	m	

Pump

Operating flow	m³/h		Frequency	Hz	50
Operating head	m		Number of poles		4
Impeller diameter designed	mm	177	Speed	rpm	1450

Test standard: ISO 9906:2012 - Grade3B

Water; 20°C; 998.3kg/m³; 1mm²/s

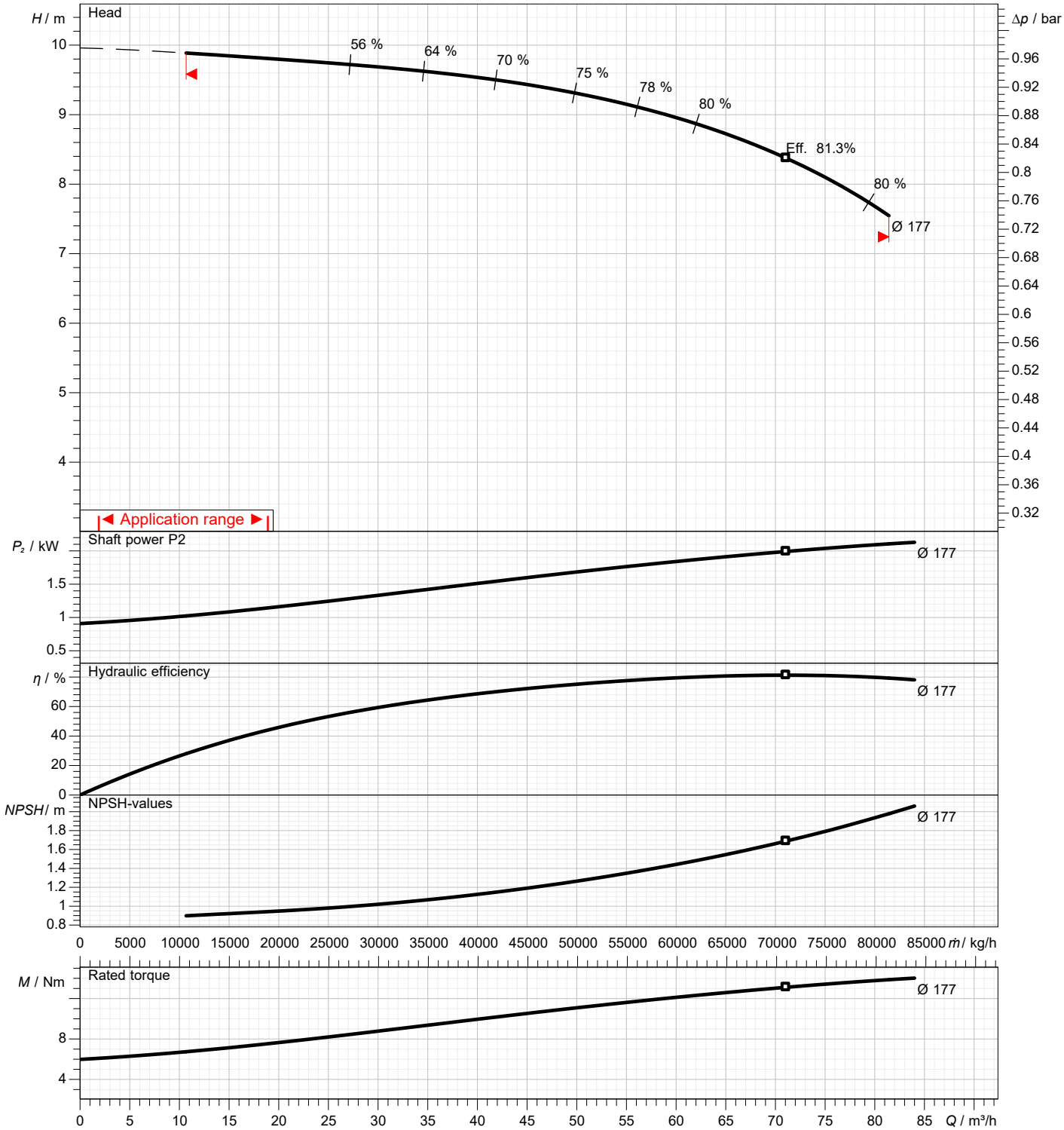

EBARA

Dimensions

Pump name GS4 65-160-177/B/2.2

Customer	Date	2024-06-14	Company
Contact	Item no.		Issued by
Phone	Project		Phone
E-mail	Project ID	Proiect redenumit 2024-06-14 18:50:31	E-mail

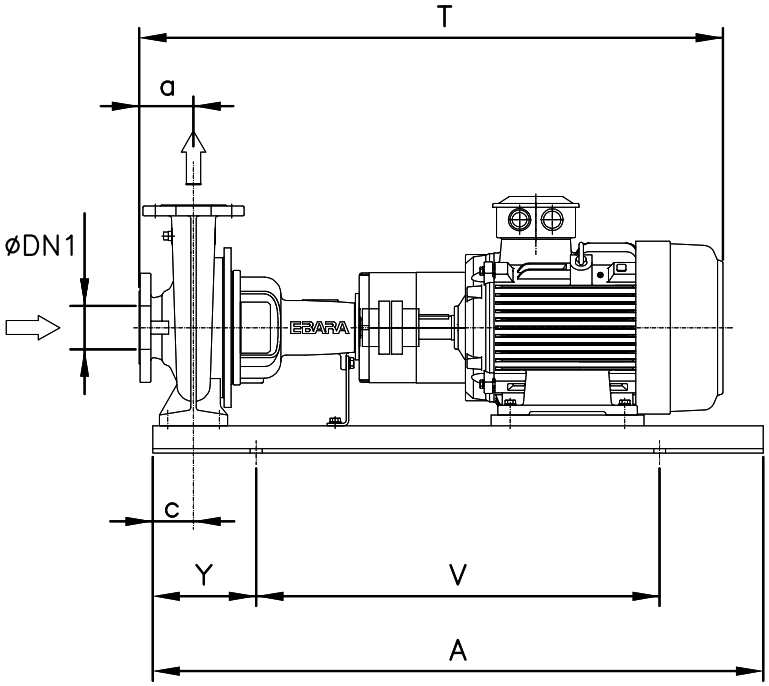

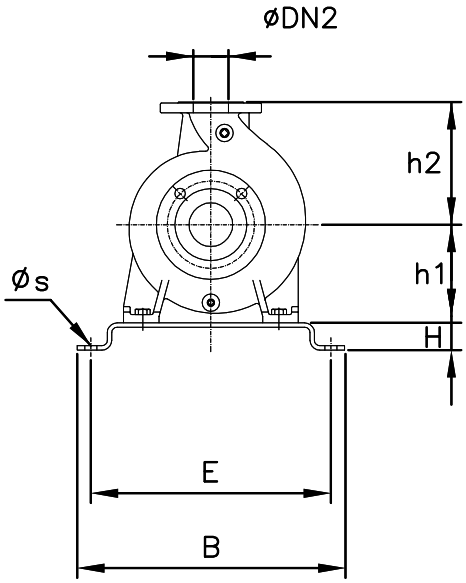

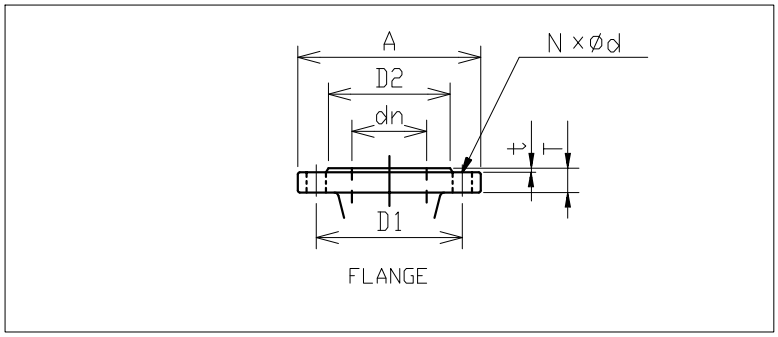

Total weight : 106 kg

Pump dimensions				mm
a	100			
A	900			
B	490			
c	100			
DN1	80			
DN2	65			
E	440			
H	50			
h1	160			
h2	200			
s	18			
T	839			
V	600			
Y	150			

Suction side		mm
A	200	
d	19	
D1	160	
D2	132	
dn	80	
N	8(Num)	
t	2	
T	22	

Discharge side		mm
A	185	
d	19	
D1	145	
D2	118	
dn	65	
N	4(Num)	
t	2	
T	20	

EBARA

Construction

Pump name GS4 65-160-177/B/2.2

Customer	Date	2024-06-14	Company
Contact	Item no.		Issued by
Phone	Project		Phone
E-mail	Project ID	Proiect redenumit 2024-06-14 18:50:31	E-mail