Tender text

Project name
Project ID

Customer
Contact
E-mail
Phone

Company
Contact
E-mail
Phone

2025-01-20

Pos.no	Description	Item no.
	Volute casing pump	
	Centrifugal pump: Etanorm 100-080-200/1852 GG	05119904

Etanorm
Horizontal single-stage volute casing pump, ratings to EN 733, radially split volute casing with integrally cast pump feet, long-coupled design. The pump is designed with replaceable casing wear rings, closed radial impeller with multiply curved vanes, single mechanical seal or double mechanical seals to EN 12756, shaft equipped with replaceable shaft protecting sleeve in the shaft seal area. The back pull-out design allows the coupling, bearing brackets and impeller to be dismantled without the need to disconnect the pump casing from the piping.

Operating data

Fluid handled	: Water
Flow rate	:
Head	:
Fluid temperature	: 20,00 °C
Permissible fluid temperature (min./max.)	: 0 bis +110
Maximum operating pressure	: ≤ 16 bar
Ambient temperature (min./max.)	: -10 to +50°C

Motor/electronics

MEI value	: ≥ 0,4
Motor rating	: 18,5 kW
Max. rated current	: 35,6 A
Speed	: 500 1/min … 3.600 1/min
Power supply	: 3 x 380 V AC - 15 % to 480 V AC +10 %
Motor size	: 160L
Energy efficiency class	:
Enclosure	: IP55
Motor make	: KSW - IEC

Materials

Pump casing (102)	: Grey cast iron JL1040
Impeller (230)	: Steel/tempered steel E335/C45
Pump shaft (210)	: Grey cast iron JL1040
Casing cover (161)	: Grey cast iron JL1040

Casing wear ring, suction side (502.01): DPAF seal plate, asbestos-

Tender text

Project name
Project ID

Customer
Contact
E-mail
Phone

Company
Contact
E-mail
Phone

Pos.no	Description	Item no.	Qty.	UP / EUR	TP / EUR
	free Casing wear ring, discharge side (502.02): Grey cast iron GG / cast iron Shaft seal type : Single mechanical seal, conical casing cover Shaft seal material :10 = Q1Q1X4GG **Installation** Installation type : Baseplate for the entire pump set (pump + drive) **Dimensions and connections** Nominal size of discharge nozzle DN2 : DN 080 Nominal diameter of suction nozzle DN1 : DN 100 Nominal pressure, suction side : 16 Nominal pressure, discharge side : 16 **Purchase order information** Approx. net weight : 274,5 kg Make : KSB Type : Etanorm 100-080-200/1852 GG Material price group : 55 **Material number** : 05119904				

Data sheet: technical data

Project name		**Item-No.**	
Project ID		**Design**	**Volute casing pump**
		Type / Coding	**Etanorm 100-080-200/1852 GG**

Customer
Contact
E-mail
Phone

Company
Contact
E-mail
Phone

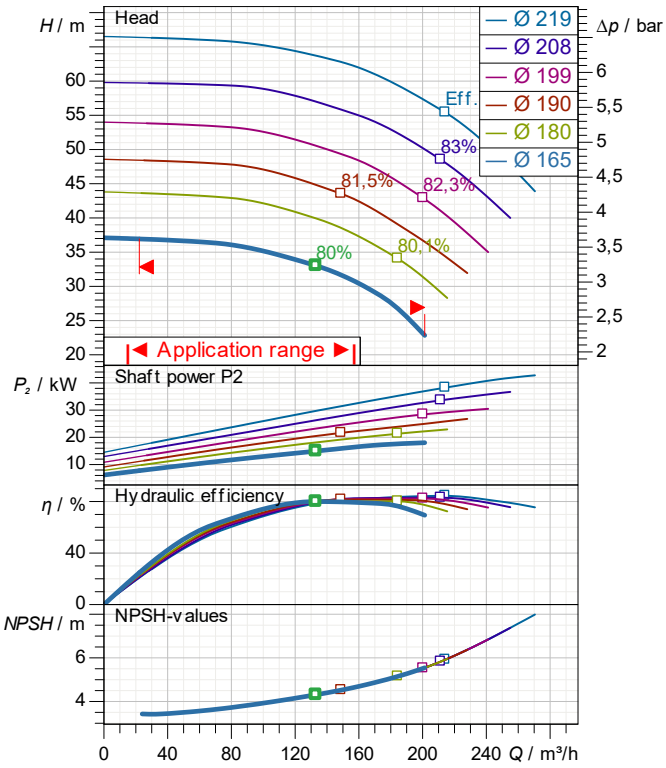

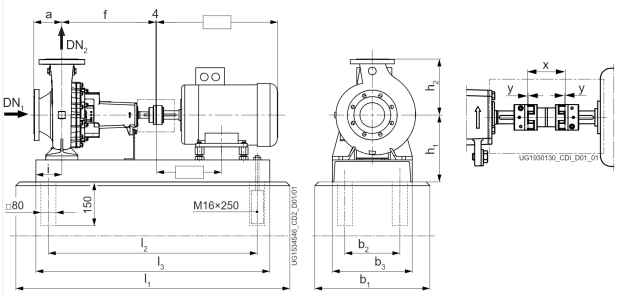

demand data

Flow	
Head	
Geodetic head	
Media	Water
Liquid temperature	20 °C
Concentration	100 %

Pump data

Make	KSB
Type	Etanorm 100-080-200/1852 GG
Design	Volute casing pump
Specific design	Single head pump
Max. fluid temperature	140 °C

Hydraulic data (Duty point)

Flow	
Head	
Efficiency	
Minimum Efficiency Index	≥ 0,4

Material / sealing element

Volute casing	Grey cast iron JL1040
Discharge cover	Grey cast iron JL1040
Shaft	Steel/tempered steel E335/C45
Impeller	Grey cast iron JL1040
Bearing bracket lantern	DPAF seal plate, asbestos-free
Casing wear ring	Grey cast iron GG / cast iron

Motor data

Power uptake	20 kW
Rated power	18,5 kW
Speed	2.945 1/min
Rated voltage	400 V
Rated current	35,6 A
Degree of protection	IP55

Product information

Ident. No./ type key	05119904
Weight loaded	274,5 kg
Gross price	11.977,99 EUR
PL 2025-01-20	
Price group	55

Data sheet: performance curve

Project name		**Item-No.**	
Project ID		**Design**	**Volute casing pump**
		Type / Coding	**Etanorm 100-080-200/1852 GG**

Customer
Contact
E-mail
Phone

Company
Contact
E-mail
Phone

2025-01-20

Performance curve

Etanorm 100-080-200/1852 GG

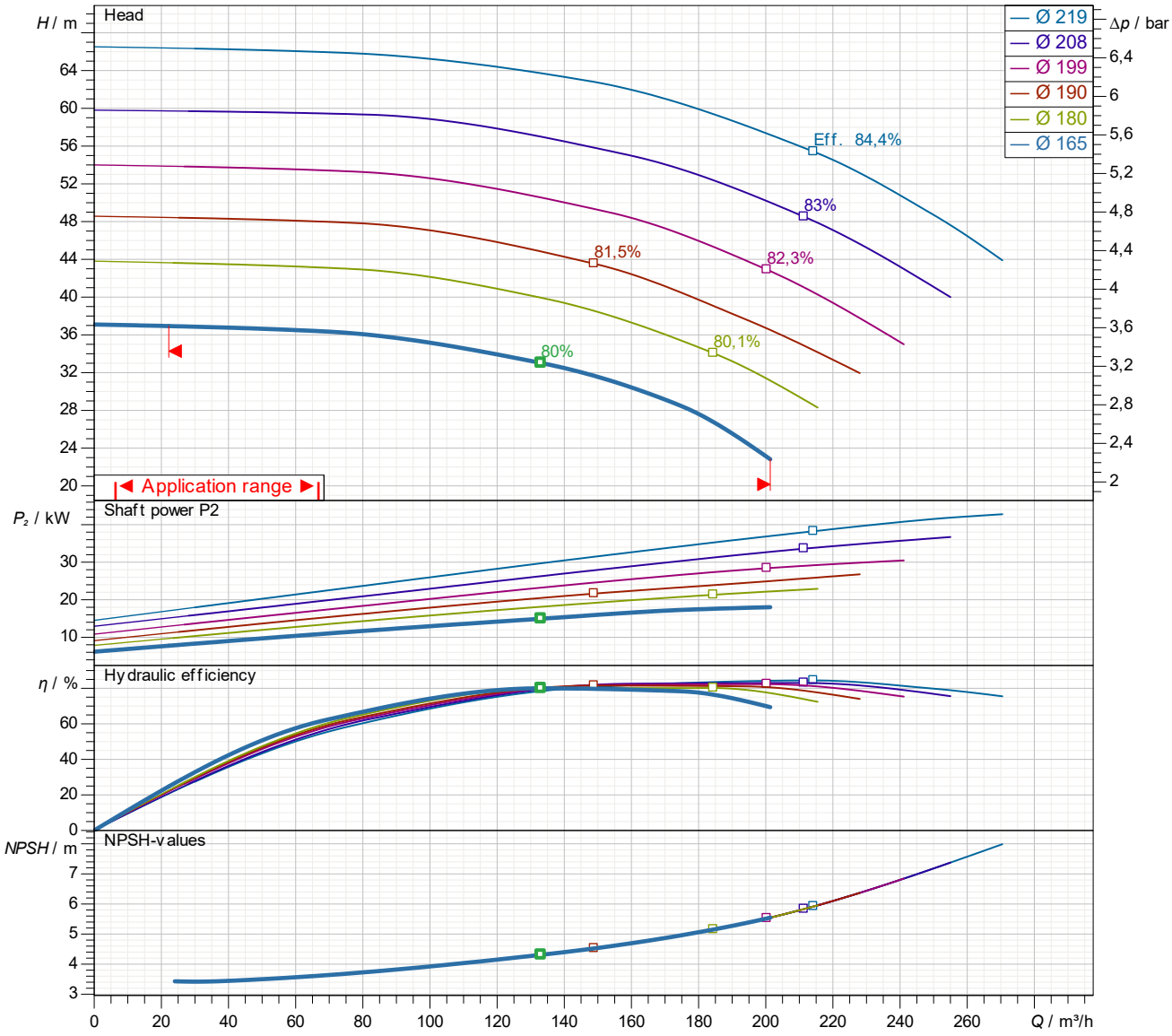

Density	998,3 kg/m³
Viscosity	1,005 mm²/s

Dimensions

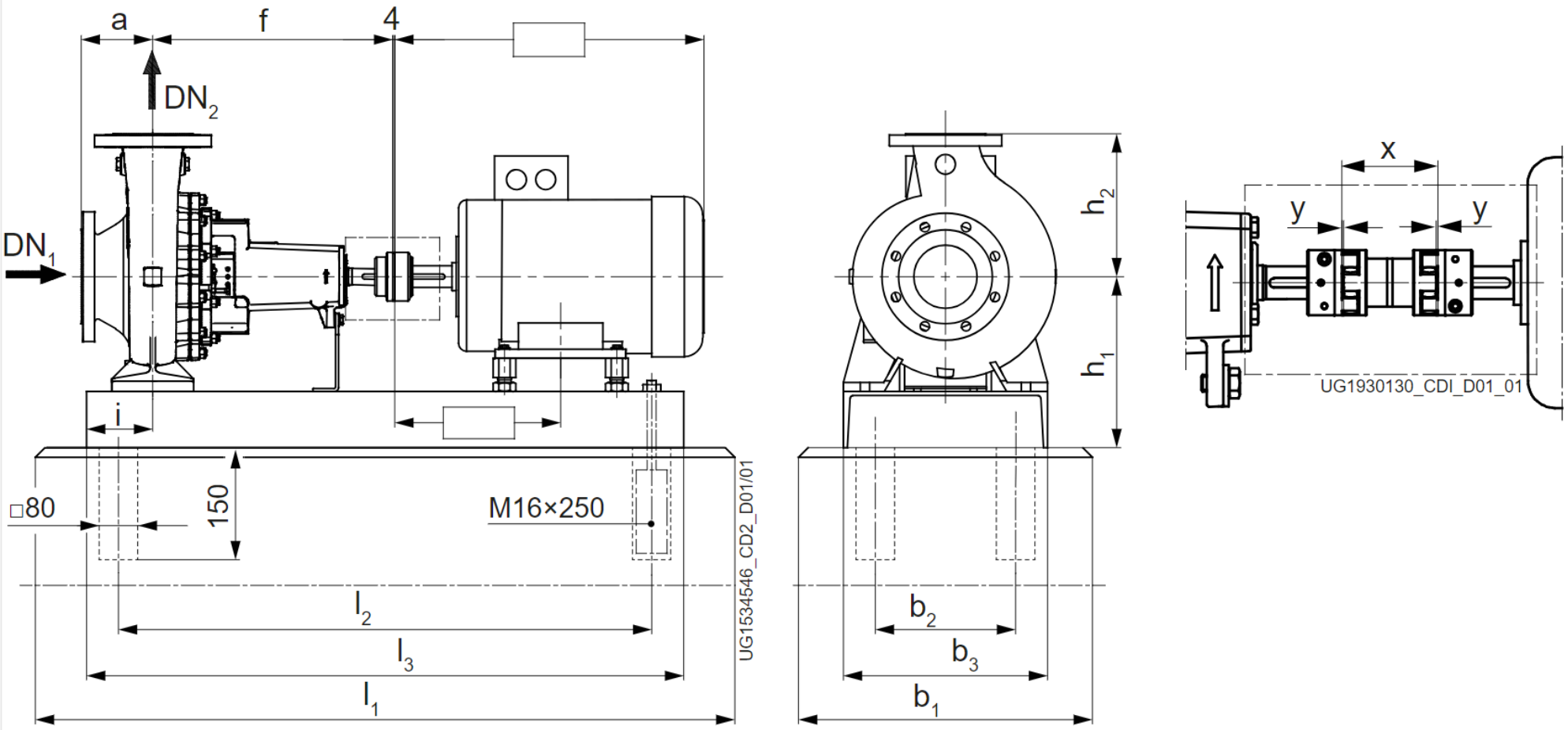

Name	Wert	Name	Wert
a	125 mm	l2	1.190 mm
b1	550 mm	l3	1.250 mm
b2	320 mm	p1	525 mm
b3	400 mm	x	140 mm
DN1	100 mm	z	350 mm
DN2	80 mm		
f	470 mm		
h1	290 mm		
h2	250 mm		
i	112 mm		
l1	1.400 mm		