Tender text

Project name
Project ID

Customer
Contact
E-mail
Phone

Company
Contact
E-mail
Phone

2025-01-20

Pos.no	Description	Item no.
	Close-coupled pumps	
	Etabloc 150-125-200/1104 GG	05126724

Etabloc

Horizontal single-stage volute casing pump in close-coupled design, with ratings to EN 733.
Axial suction nozzle, discharge nozzle pointing radially upwards.
Shaft fitted with a replaceable shaft sleeve in the shaft seal area.
Volute casing and casing cover with replaceable casing wear rings.
Volute casing with integrally cast pump feet for variants B, C and S.
Impeller matched to the operating point for saving energy.

Operating data

Fluid handled : Water

Flow rate :

Head :

Fluid temperature : 20,00 °C

Permissible fluid temperature (min./max.) : 0 bis +110

Maximum operating pressure : ≤ 16 bar

Ambient temperature : -10 to +50°C

Tender text

Project name
Project ID

Customer
Contact
E-mail
Phone

Company
Contact
E-mail
Phone

Pos.no	Description	Item no. (min./max.)	Qty.	UP / EUR	TP / EUR
		Motor/electronics			
		MEI value :			
	≥ 0,4				
		Motor rating :			
	11 kW				
		Max. rated current :			
	22,8 A				
		Speed :			
	500 1/min … 1.800 1/min				
		Power supply :			
	3 x 380 V AC - 15 % to 480 V AC +10 %				
		Motor size :			
	160M				
		Energy efficiency class			
	: IE3 = Premium Efficiency				
		Enclosure :			
	IP55				
		Motor make :			
	KSW - IEC				
		Materials			
		Pump casing (102) :			
	Grey cast iron JL1040				
		Impeller (230) :			
	Steel/tempered steel E335/C45				
		Pump shaft (210) :			

Tender text

Project name
Project ID

Customer
Contact
E-mail
Phone

Company
Contact
E-mail
Phone

2025-01-20

Pos.no	Description	Item no.	Qty.	UP / EUR	TP / EUR
	Grey cast iron JL1040				
		Casing cover (161) :			
	Grey cast iron JL1040				
		Casing wear ring,			
	suction side (502.01): DPAF seal plate, asbestos-free				
		Casing wear ring,			
	discharge side (502.02): Grey cast iron GG / cast iron				
		Shaft seal type :			
	Single mechanical seal with vented chamber (A-type cover)				
		Shaft seal material			
	:10 = Q1Q1X4GG				
		Dimensions and			
	connections				
		Nominal size of			
	discharge nozzle DN2 : DN 125				
		Nominal diameter of			
	suction nozzle DN1 : DN 150				
		Nominal pressure,			
	suction side : 16				
		Nominal pressure,			
	discharge side : 16				
		Purchase order			
	information				
		Approx. net weight :			
	185,4 kg				
		Make :			
	KSB				

Tender text

Project name
Project ID

Customer
Contact
E-mail
Phone

Company
Contact
E-mail
Phone

2025-01-20

Pos.no	Description	Item no.	Qty.	UP / EUR	TP / EUR
	Etabloc 150-125-200/1104 GG	Type :			
	V3	Material price group :			
	05126724	**Material number** :			

Data sheet: technical data

Project name		**Item-No.**	
Project ID		**Design**	**Close-coupled pumps**
		Type / Coding	**Etabloc 150-125-200/1104 GG**

Customer
Contact
E-mail
Phone

Company
Contact
E-mail
Phone

2025-01-20

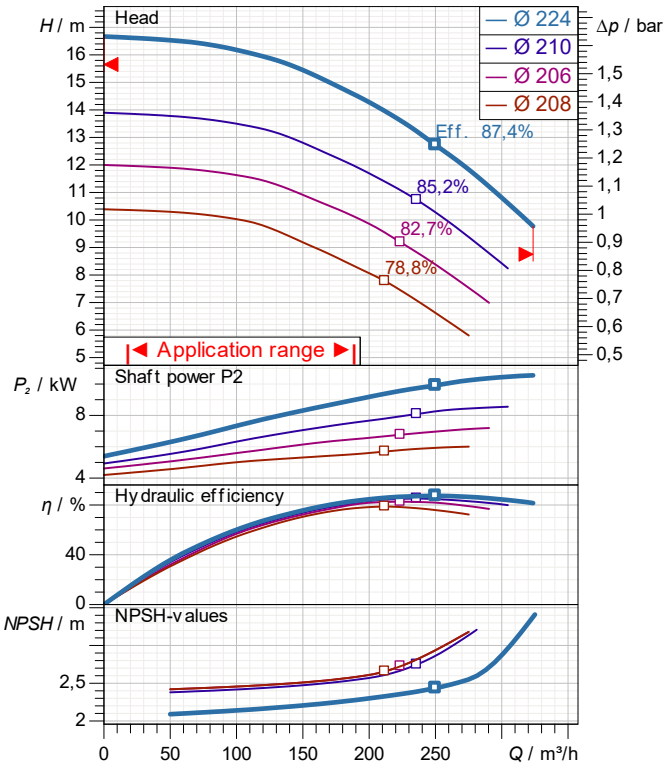

demand data

Flow	
Head	
Geodetic head	
Media	Water
Liquid temperature	20 °C
Concentration	100 %

Pump data

Make	KSB
Type	Etabloc 150-125-200/1104 GG
Design	Close-coupled pumps
Specific design	Single head pump
Max. fluid temperature	

Hydraulic data (Duty point)

Flow	
Head	
Efficiency	
Minimum Efficiency Index	≥ 0,4

Material / sealing element

Volute casing	Grey cast iron JL1040
Discharge cover	Grey cast iron JL1040
Shaft	Steel/tempered steel E335/C45
Impeller	Grey cast iron JL1040
Bearing bracket lantern	DPAF seal plate, asbestos-free
Casing wear ring	Grey cast iron GG / cast iron

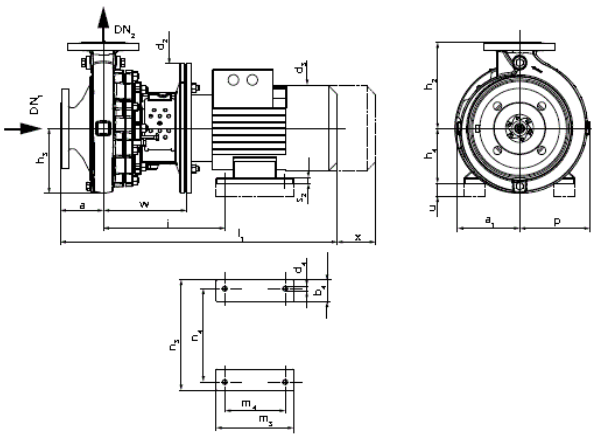

Motor data

Power uptake	12 kW
Rated power	11 kW
Speed	1.470 1/min
Rated voltage	400 V
Rated current	22,8 A
Degree of protection	IP55

Product information

Ident. No./ type key	05126724
Weight loaded	185,4 kg
Gross price	12.700,69 EUR
PL 2025-01-20	
Price group	V3

Data sheet: performance curve

Project name		**Item-No.**	
Project ID		**Design**	**Close-coupled pumps**
		Type / Coding	**Etabloc 150-125-200/1104 GG**

Customer
Contact
E-mail
Phone

Company
Contact
E-mail
Phone

2025-01-20 **Page 6 / 7**

Performance curve

Etabloc 150-125-200/1104 GG

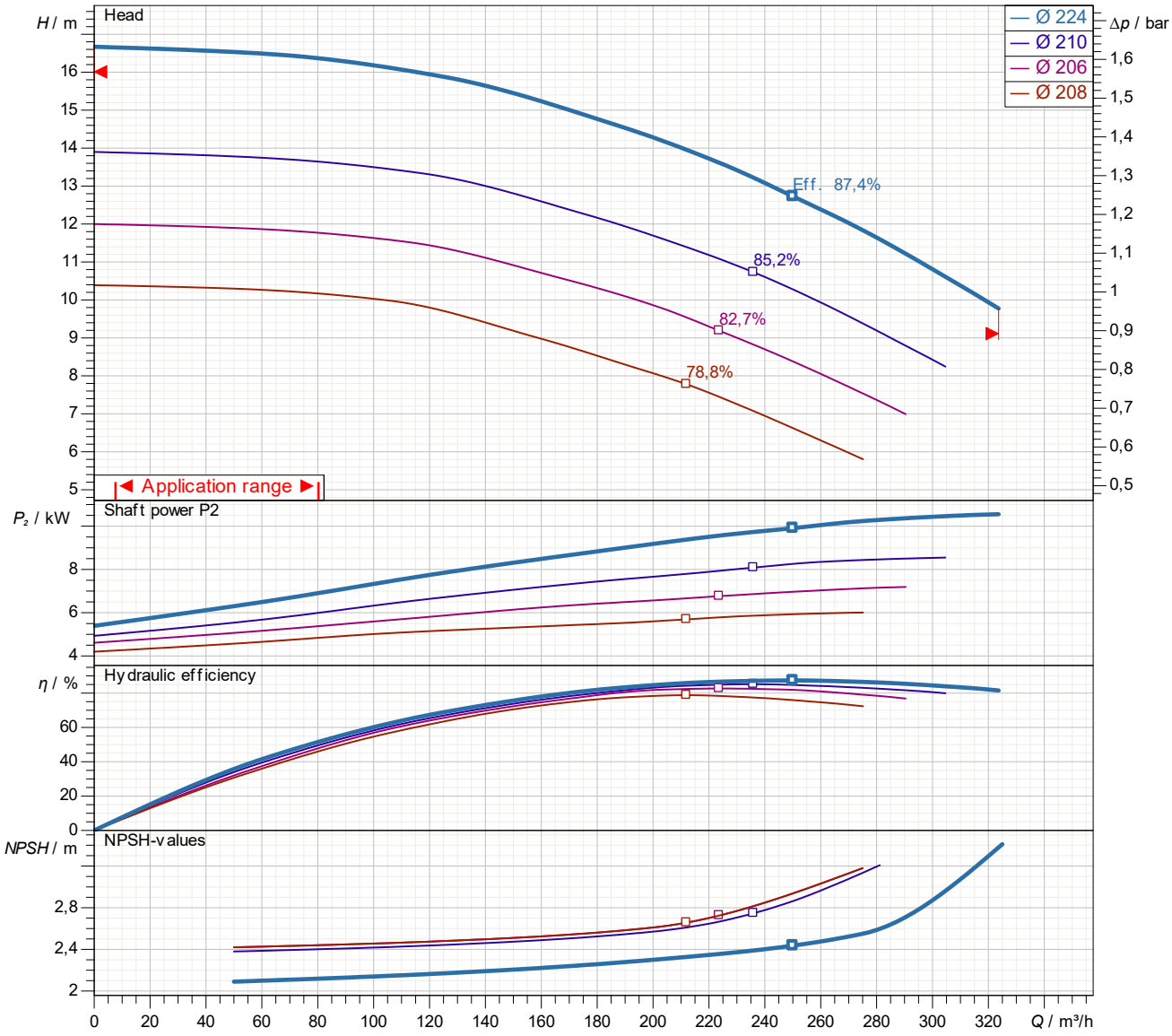

Density	998,3 kg/m³
Viscosity	1,005 mm²/s

Dimensions

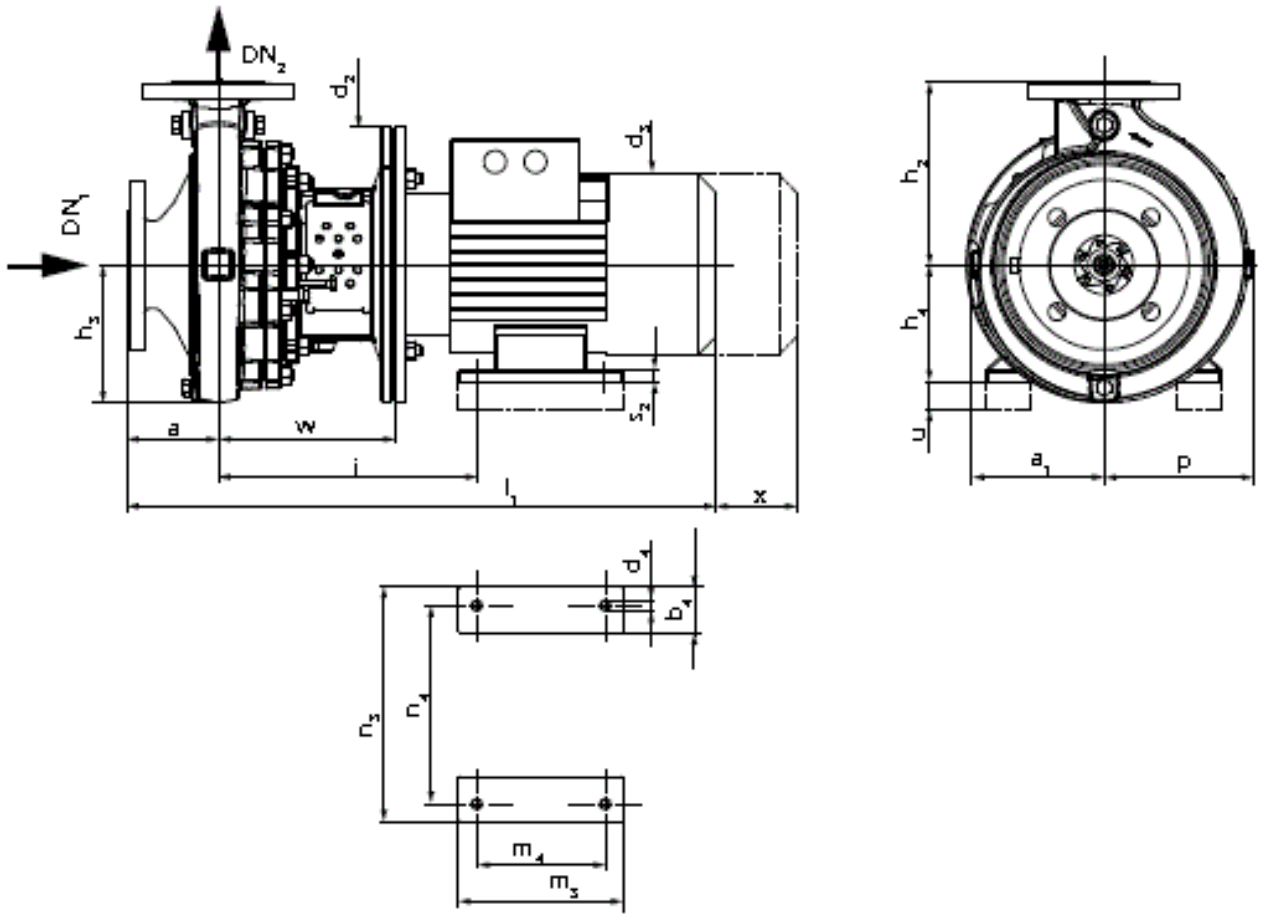

Name	Wert	Name	Wert
a	140 mm	m1	125 mm
a1	189 mm	m2	95 mm
d2	350 mm	m3	310 mm
d3	325 mm	m4	210 mm
DN1	150 mm	n1	260 mm
DN2	125 mm	n2	180 mm
h1	180 mm	n3	323 mm
h2	315 mm	n4	254 mm
h3	212 mm	p	242 mm
i	354 mm	s2	21 mm
l1	932 mm	w	246 mm