Contact
E-mail
Phone

Customer

Contact
E-mail
Phone

Technical data

Glanded standard single pump
Atmos GIGA-I 125/380-30/4

Project ID	Untitled project 2025-03-01 19:22:28.264
Project name	
Installation location	
Customer pos. No.	

Date 2025-03-01

Duty chart

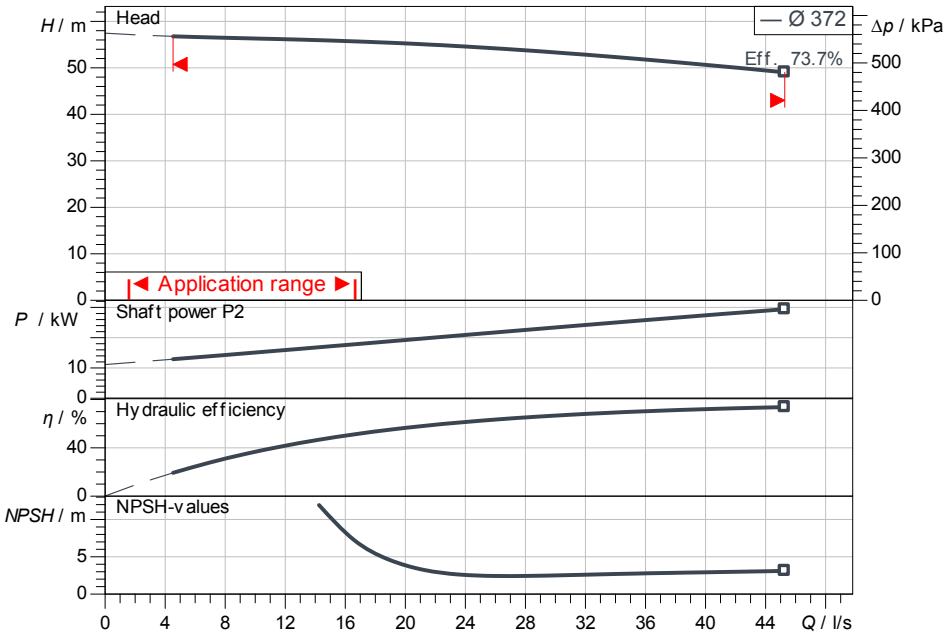

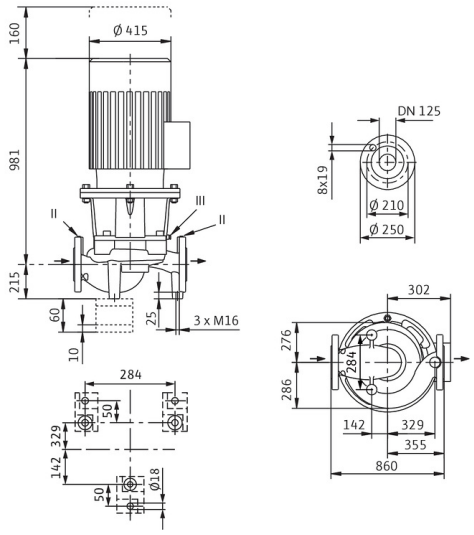

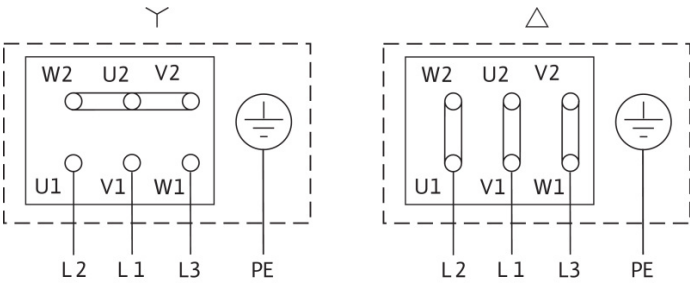

Requested data

Flow	
Head	
Media	Water 100 %
Fluid temperature	20.00 °C
Density	998.30 kg/m³
Kin. viscosity	1.00 mm²/s

Hydraulic data (Duty point)

Flow	
Head	
Shaft power P2	
Hydraulic efficiency	
NPSH	

Product data

Glanded standard single pump	
Atmos GIGA-I 125/380-30/4	
Max. operating pressure	1,600 kPa
Fluid temperature	-20 °C ... +140 °C
Max. ambient temperature	40 °C
Minimum efficiency index (MEI)	≥ 0.4

Motordata per Motor/Pump

Motor efficiency level	IE3
Mains connection	3~400 V / 50 Hz
Permitted voltage tolerance	+-10 %
Rated speed	1,450 1/min
Rated power P2	30.00 kW
Rated current	54.81 A
Power factor	0.86
Efficiency	
50% / 75% / 100%	92.2/ 93/93.1%
Degree of protection	IP55
Insulation class	F
Motor protection	PTC integrated

Fitting dimensions

Pipe connection on the suction side	DN 125, PN 16
Pipe connection (pressure side)	DN 125, PN 16
Port to Port	860 mm

Materials

Pump housing	
5.1301, EN-GJL-250 cataphoretic-coated	
Impeller	EN-GJL-200
Lantern	5.1301, EN-GJL-250 cataphoretic-
Shaft	1.4122
Shaft seal	AQ1EGG

Information for order placements

Weight approx.	552 kg
Item number	2220452