Contact
E-mail
Phone

Customer

Contact
E-mail
Phone

Technical data

Submersible pump
Sub TWI 6.18-38-C

Project ID	Untitled project 2025-03-17 07:24:04.380
Project name	
Installation location	
Customer pos. No.	

Date 2025-03-17

Duty chart

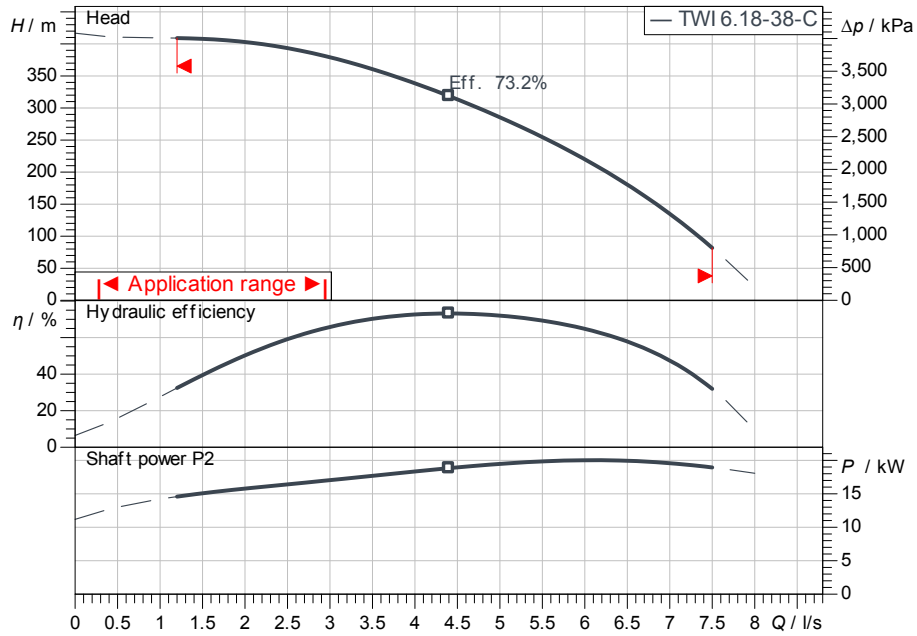

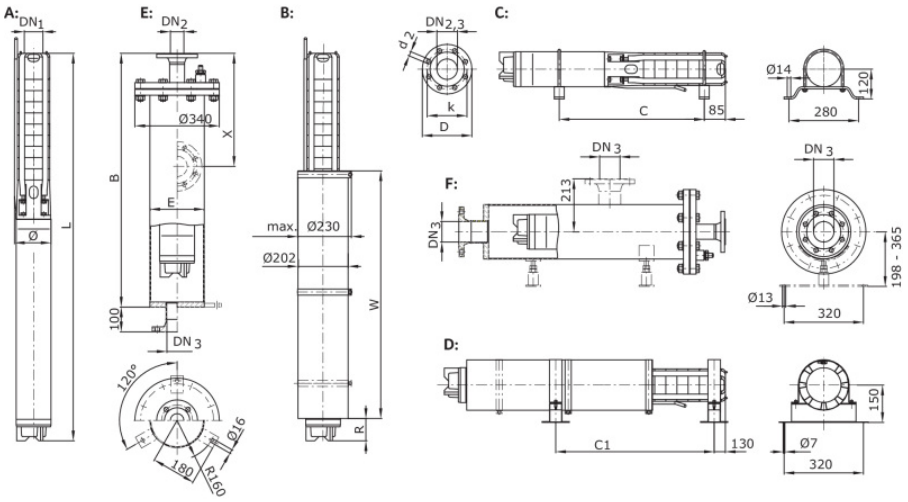

Requested data

Flow	
Head	
Media	Water 100 %
Fluid temperature	20.00 °C
Density	998.30 kg/m³
Kin. viscosity	1.00 mm²/s

Hydraulic data (Duty point)

Flow	
Head	
Shaft power P2	
Hydraulic efficiency	
Power input P1	

Product data

Submersible pump	
Sub TWI 6.18-38-C	
Max. operating pressure	
Fluid temperature	3 °C ... +30 °C
Minimum efficiency index (MEI)	≥ 0.4
Max. pump diameter	142 mm

Motordata per Motor/Pump

Mains connection	3~400 V / 50 Hz
Type of motor	Submersible motor
Activation type	Direct On Line (DOL)
Min. flow at the motor	0.1 m/s
Motor diameter	136.7 mm
Permitted voltage tolerance	+-5 %
Nominal speed	2,860 1/min
Rated power P2	22.00 kW
Rated current	45.30 A
Power factor	0.86
Degree of protection	IP68
Insulation class	F

Cable

Length of connecting cable	4 m
Cable type	4G4

Fitting dimensions

Discharge size	
Flange standard	

Materials

Information for order placements

Weight approx.	128 kg
Item number	

Approval

Dimensions mm

B	1	W	1,000
c	1		
C1	2,930		
L	3,488		