Contact
E-mail
Phone

Customer

Contact
E-mail
Phone

Technical data

Glanded energy-saving twin-head pump
DL-E 150/200-15/4

Project ID	Untitled project 2025-03-03 05:48:28.279
Project name	
Installation location	
Customer pos. No.	

Date 2025-03-03

Duty chart

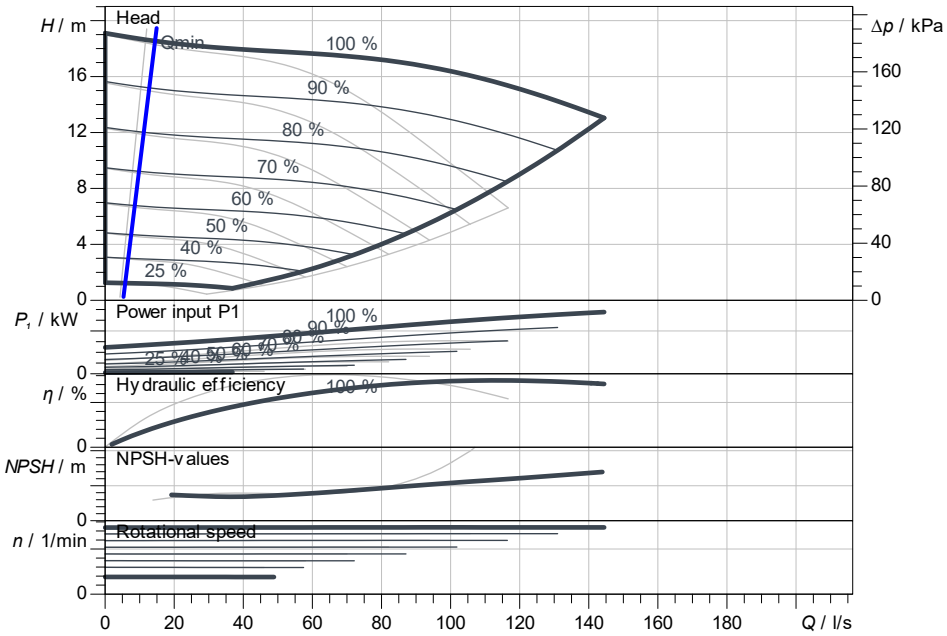

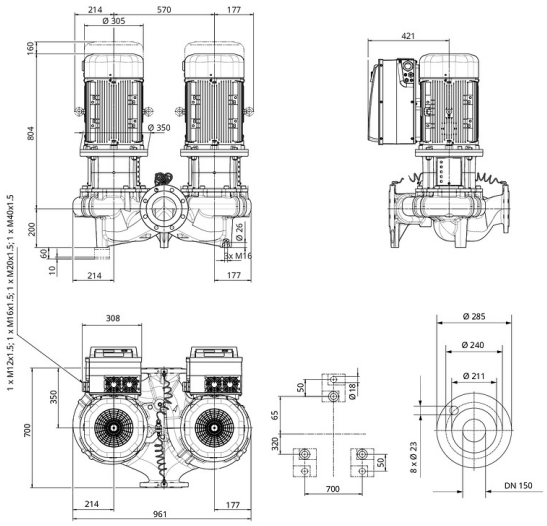

Requested data

Flow	
Head	
Media	Water 100 %
Fluid temperature	20.00 °C
Density	998.30 kg/m³
Kin. viscosity	1.00 mm²/s

Hydraulic data (Duty point)

Flow	
Head	
Power input P1	
NPSH	

Product data

Glanded energy-saving twin-head pump
DL-E 150/200-15/4

Kind of operation	n-const ADD
Max. operating pressure	1,600 kPa
Fluid temperature	-20 °C ... +140 °C
Max. ambient temperature	40 °C
Minimum efficiency index (MEI)	≥ 0.4

Motordata per Motor/Pump

Motor design	AC motor
Efficiency class	IE4
Mains connection	3~400 V / 50 Hz
Permitted voltage tolerance	+-10 %
Max. speed	1,480 1/min
Rated power P2	14.70 kW
Rated current	24.90 A
Degree of protection	IP55
Insulation class	F
Motor protection	PTC integrated

Fitting dimensions

Pipe connection on the suction side	DN 150, PN 16
Pipe connection (pressure side)	DN 150, PN 16
Port to Port	700 mm

Materials

Pump housing	5.1301, EN-GJL-250 cataphoretic-
Impeller	EN-GJL-200
Lantern	5.1301, EN-GJL-250 cataphoretic-
Shaft	1.4122
Shaft seal	AQ1EGG

Information for order placements

Weight approx.	535 kg
Item number	2226316