Contact
E-mail
Phone

Customer

Contact
E-mail
Phone

Technical data

Glandless standard pump
TOP-Z 40/7 EM PN6/10 RG

Project ID	Untitled project 2025-03-17 08:16:17.345
Project name	
Installation location	
Customer pos. No.	

Date 2025-03-17

Duty chart

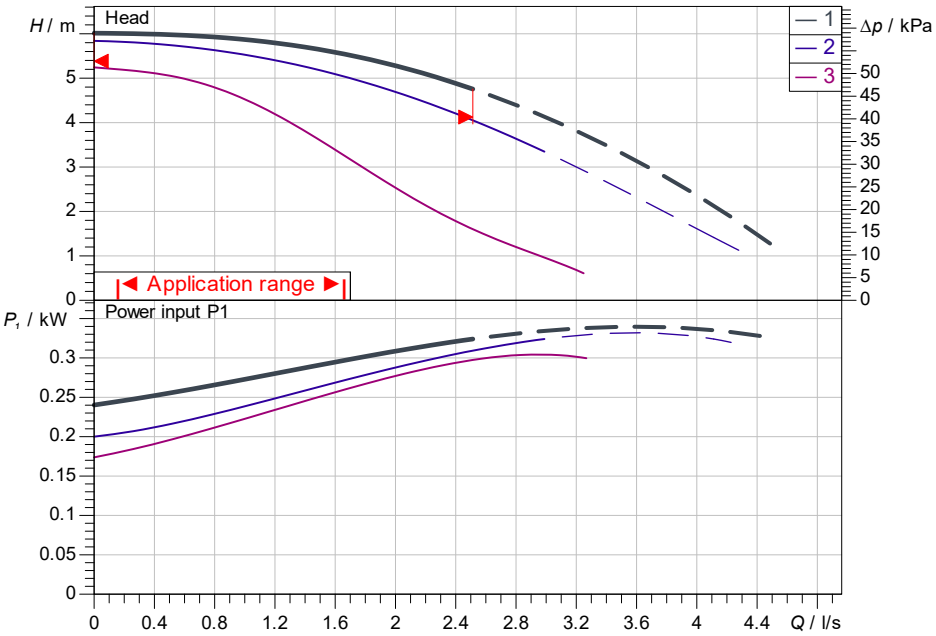

Requested data

Flow	
Head	
Media	Water 100 %
Fluid temperature	20.00 °C
Density	998.30 kg/m³
Kin. viscosity	1.00 mm²/s

Hydraulic data (Duty point)

Flow	
Head	
Power input P1	

Product data

Glandless standard pump	
TOP-Z 40/7 EM PN6/10 RG	
Max. operating pressure	1,000 kPa
Fluid temperature	0 °C ... +80 °C
Max. ambient temperature	40 °C
Max. permitted total hardness in potable water circulation systems	3.57 mmol/l (20°dH) (3.

Motordata per Motor/Pump

Mains connection	1~230 V / 50 Hz
Permitted voltage tolerance	+-10 %
Max. speed	2,700 1/min
Power input P1	340 W
Current consumption	1.62 A
Degree of protection	IPX4D
Insulation class	H
Motor protection	External protection WSK
Type of connecting cable	2 x PG13.5

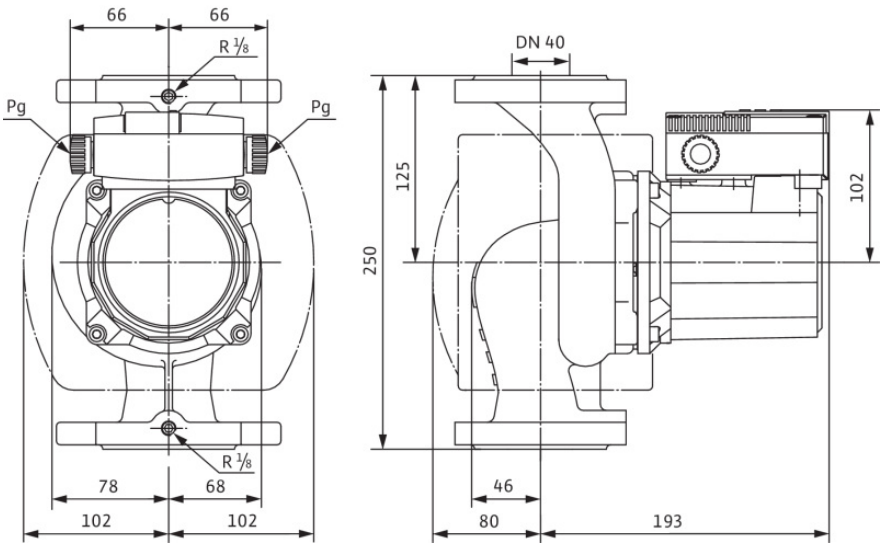

Fitting dimensions

Pipe connection on the suction side	DN 40, PN 10
Pipe connection (pressure side)	DN 40, PN 10
Port to Port	250 mm

Materials

Pump housing	Bronze, CC499K
Impeller	PPE-GF30
Shaft	1.4122
Bearing	Carbon, synthetic resin-impregnated

Information for order placements
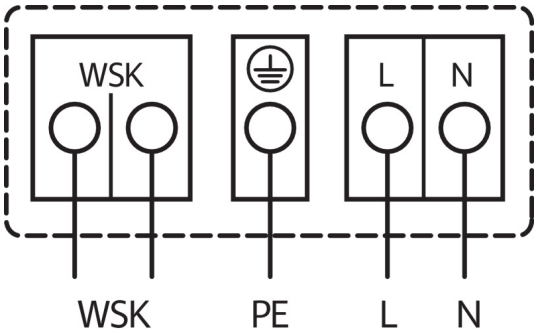
Weight approx.	13 kg
Item number	2046637