Contact
E-mail
Phone

Customer

Contact
E-mail
Phone

Technical data

Glanded energy-saving single pump
Yonos GIGA2.0-I 100/1-8/2,2

Project ID	Untitled project 2025-03-04 09:37:01.987
Project name	
Installation location	
Customer pos. No.	

Date 2025-03-04

Duty chart

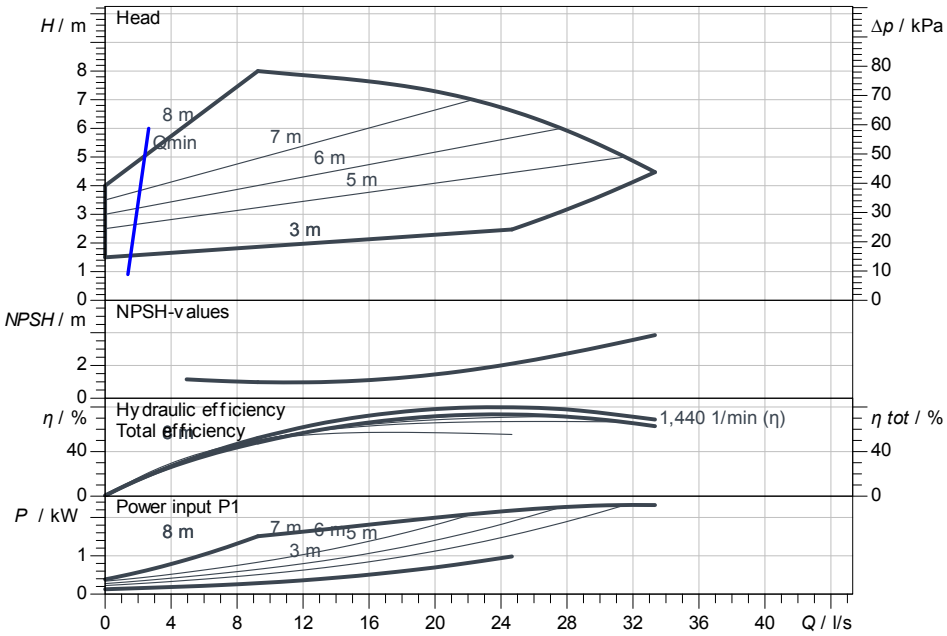

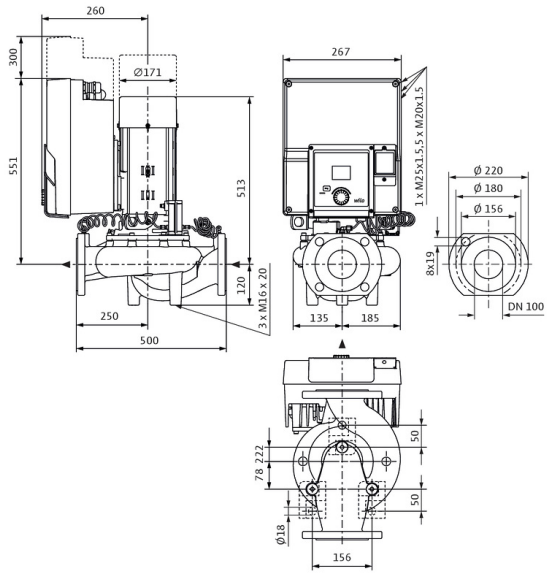

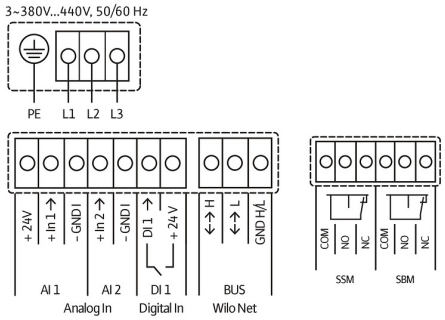

Requested data

Flow	
Head	
Media	Water 100 %
Fluid temperature	20.00 °C
Density	998.30 kg/m³
Kin. viscosity	1.00 mm²/s

Hydraulic data (Duty point)

Flow	
Head	
Power input P1	
NPSH	

Product data

Glanded energy-saving single pump
Yonos GIGA2.0-I 100/1-8/2,2

Kind of operation	dp-v
Max. operating pressure	1,600 kPa
Fluid temperature	-20 °C ... +120 °C
Max. ambient temperature	50 °C
Minimum efficiency index (MEI)	≥ 0.4

Motordata per Motor/Pump

Motor design	EC motor
Efficiency class	IE5
Mains connection	3~400 V / 50 Hz
Permitted voltage tolerance	+-10 %
Max. speed	1,440 1/min
Rated power P2	2.20 kW
Rated current	3.60 A
Degree of protection	IP55
Insulation class	F
Motor protection	PTC integrated

Fitting dimensions

Pipe connection on the suction side	DN 100, PN 16
Pipe connection (pressure side)	DN 100, PN 16
Port to Port	500 mm

Materials

Pump housing	5.1301/EN-GJL-250
Impeller	EN-GJL-200
Lantern	5.1301, EN-GJL-250 cataphoretic-
Shaft	1.4057
Shaft seal	AQ1EGG

Information for order placements

Weight approx.	87 kg
Item number	2205023