Contact
E-mail
Phone

Customer

Contact
E-mail
Phone

Technical data

Glanded high-efficiency twin-head pump
Stratos GIGA-D 100/2-23/11

Project ID Untitled project 2025-03-04 05:18:48.548

Project name
Installation location
Customer pos. No.

Date 2025-03-04

Duty chart

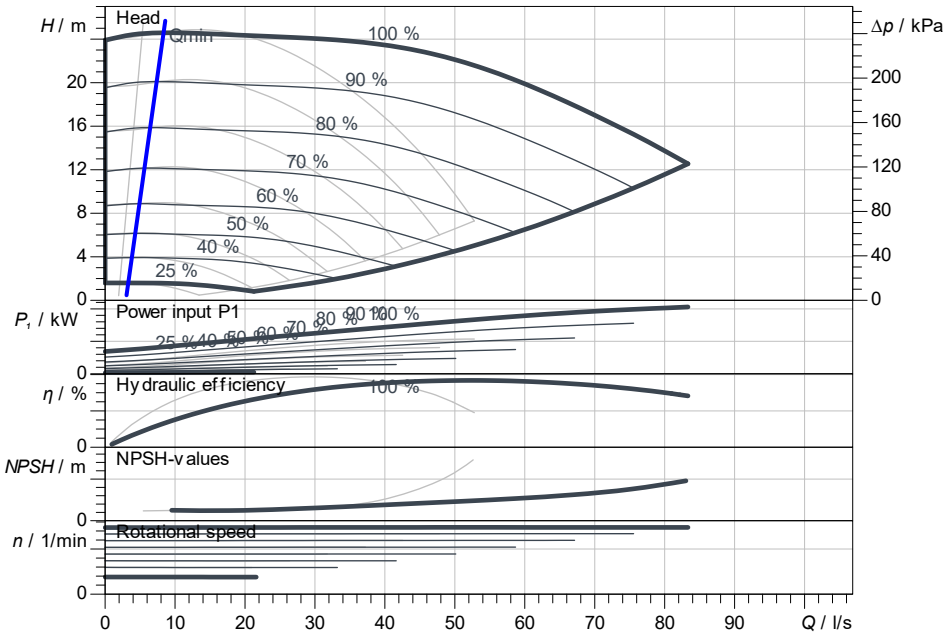

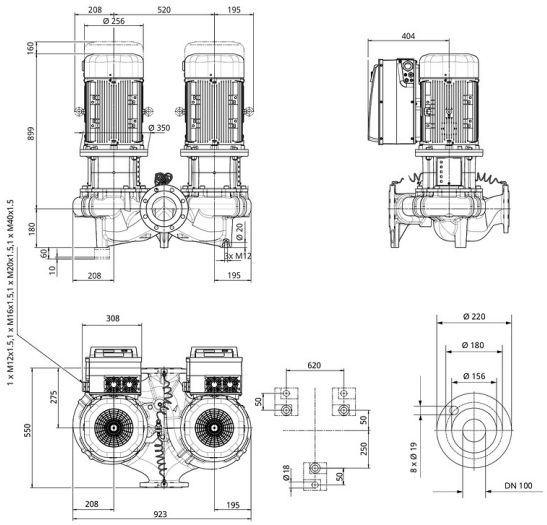

Requested data

Flow	
Head	
Media	Water 100 %
Fluid temperature	20.00 °C
Density	998.30 kg/m³
Kin. viscosity	1.00 mm²/s

Hydraulic data (Duty point)

Flow	
Head	
Power input P1	
NPSH	

Product data

Glanded high-efficiency twin-head pump	
Stratos GIGA-D 100/2-23/11	
Kind of operation	n-const ADD
Max. operating pressure	1,600 kPa
Fluid temperature	-20 °C ... +140 °C
Max. ambient temperature	40 °C
Minimum efficiency index (MEI)	≥ 0.4

Motordata per Motor/Pump

Motor design	EC motor
Efficiency class	IE5
Mains connection	3~400 V / 50 Hz
Permitted voltage tolerance	+-10 %
Max. speed	1,480 1/min
Rated power P2	10.60 kW
Rated current	17.00 A
Degree of protection	IP55
Insulation class	F
Motor protection	PTC integrated

Fitting dimensions

Pipe connection on the suction side	DN 100, PN 16
Pipe connection (pressure side)	DN 100, PN 16
Port to Port	550 mm

Materials

Pump housing	5.1301, EN-GJL-250 cataphoretic-
Impeller	EN-GJL-200
Lantern	5.1301, EN-GJL-250 cataphoretic-
Shaft	1.4122
Shaft seal	AQ1EGG

Information for order placements

Weight approx.	478 kg
Item number	2223128