Contact
E-mail
Phone

Customer

Contact
E-mail
Phone

Technical data

Multi-pump system
SiBoost Smart FC 2 Helix V 604

Project ID Untitled project 2025-03-04 01:04:54.425

Project name
Installation location
Customer pos. No.

Date 2025-03-04

Duty chart

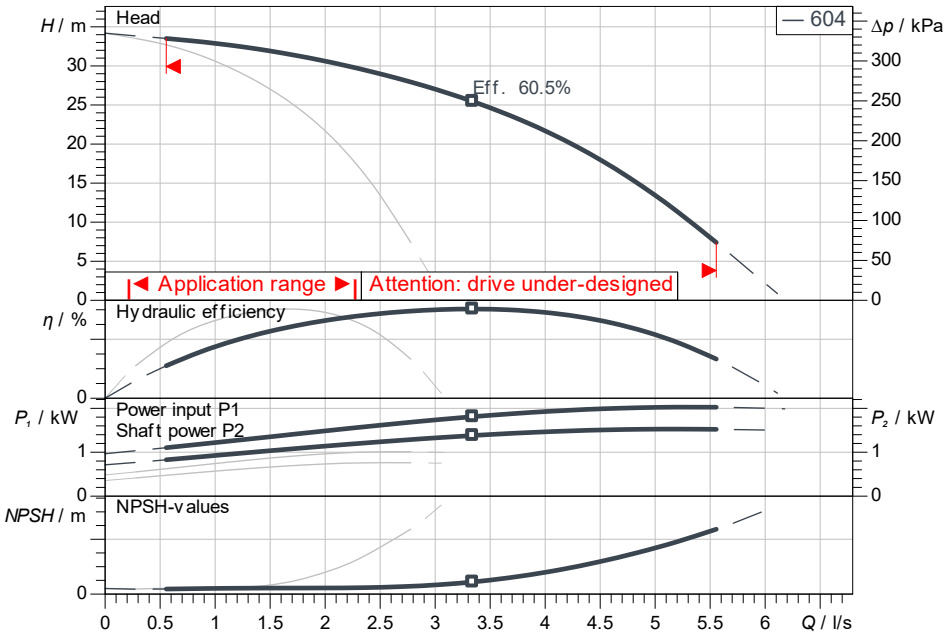

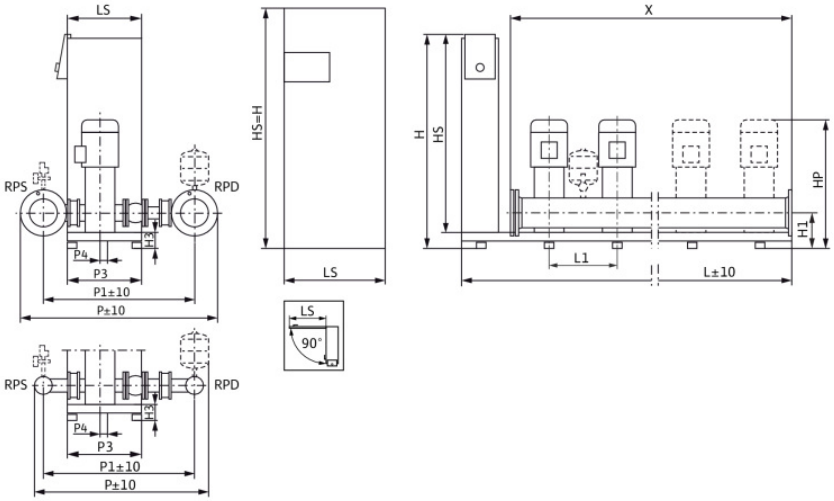

Requested data

Flow	
Head	
Media	Water 100 %
Fluid temperature	20.00 °C
Density	998.30 kg/m³
Kin. viscosity	1.00 mm²/s

Hydraulic data (Duty point)

Flow	
Head	
Shaft power P2	

Product data

Multi-pump system
SiBoost Smart FC 2 Helix V 604

No. of pumps	2
Max. operating pressure	1,600 kPa
Inlet pressure max.	600
Fluid temperature	3 °C ... +50 °C
Max. ambient temperature	40 °C
Protection class system	IP55
Protection class of switchgear	IP54
Diaphragm pressure vessel	Yes
Low-water cut-out switchgear	No

Motordata per Motor/Pump

Motor efficiency level	IE3
Mains connection	3~400 V / 50 Hz
Permitted voltage tolerance	+-10 %
Rated speed	2,900 1/min
Rated power P2	0.75 kW
Rated current	1.70 A
Power factor	0.81
Efficiency	
50% / 75% / 100%	76/79.7/80.7%
Degree of protection	IP55
Insulation class	F
Motor protection	Yes

Fitting dimensions

Pipe connection on the suction side	R 2, PN 10
Pipe connection (pressure side)	R 2, PN 16

Materials

Pump housing	1.4301
Impeller	1.4307
Shaft	1.4301
Shaft seal	Q1BE3GG
Gasket material	EPDM
Pipework material	1.4307

Information for order placements

Weight approx.	167 kg
Item number	2536034

Dimensions mm

DNd	R 2, PN 1	H3	90	LS	250	X	600
DNs	R 2, PN 1	HP	755	P	706		
H	1,405	HS	1,300	P1	573		
H1	140	L	950	P3	420		
H2	250.2	L1	300	P4	30		

Contact
E-mail
Phone

Customer

Contact
E-mail
Phone

Dimensions

Multi-pump system

SiBoost Smart FC 2 Helix V 604

Project ID	Untitled project 2025-03-04 01:04:54.425
Project name	
Installation location	
Customer pos. No.	

Date 2025-03-04

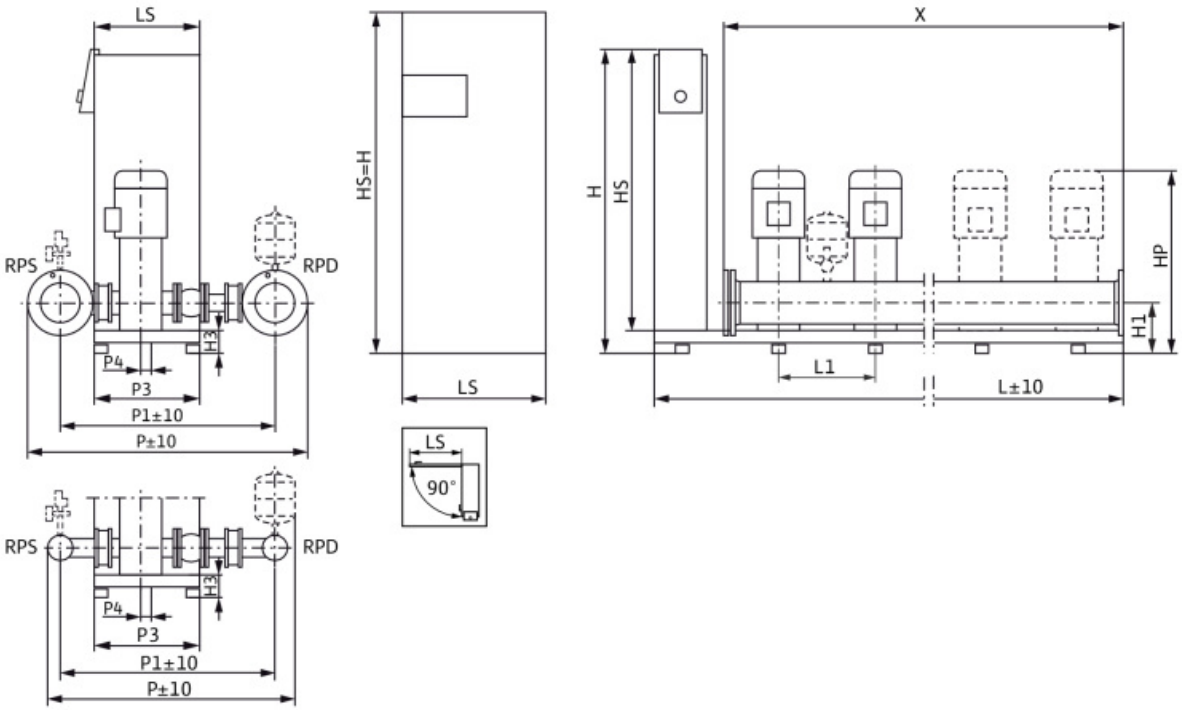

Standard

Suction side	R 2, PN 10/PN 16
Discharge side	R 2, PN 10/PN 16

Dimensions mm

Name	Value	Name	Value	Name	Value	Name	Value
DNd	R 2, PN 16	HS	1,300	P4	30		
DNs	R 2, PN 10	L	950	X	600		
H	1,405	L1	300				
H1	140	LS	250				
H2	250.2	P	706				
H3	90	P1	573				
HP	755	P3	420				