Contact
E-mail
Phone

Customer

Contact
E-mail
Phone

Technical data

Glanded energy-saving single pump
BL-E32/125-4/2

Project ID Untitled project 2025-03-02 21:52:22.079

Project name
Installation location
Customer pos. No.

Date 2025-03-02

Duty chart

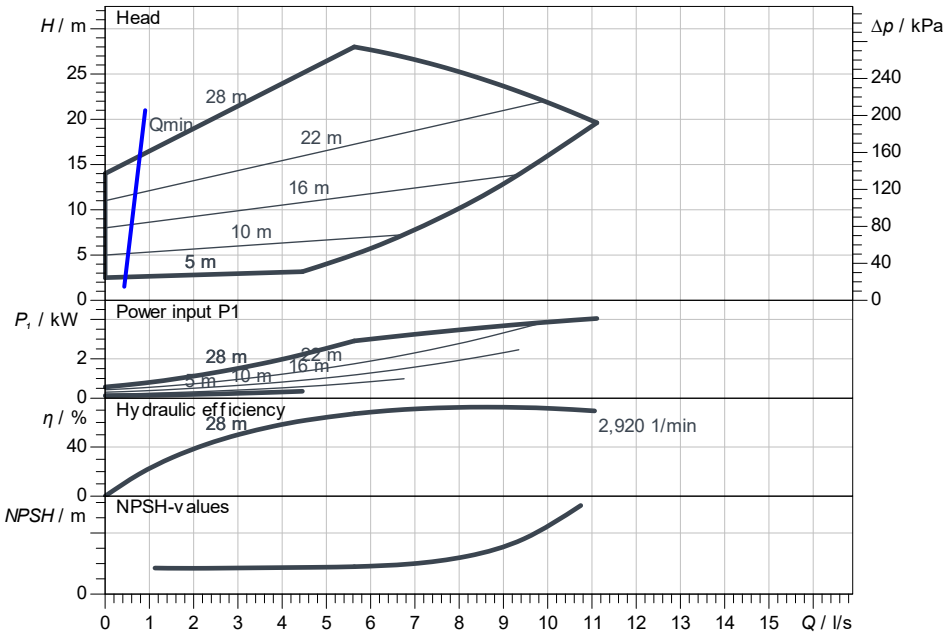

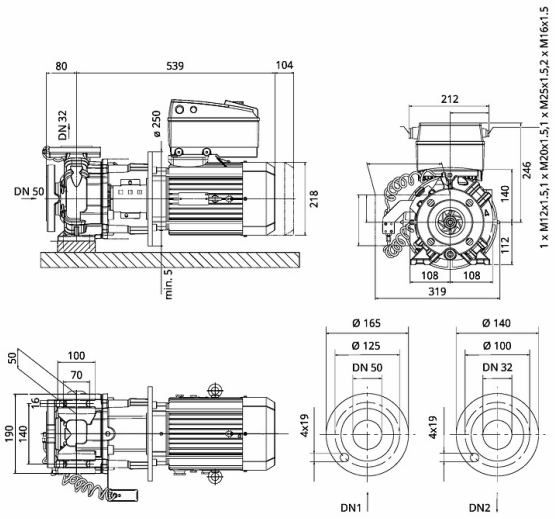

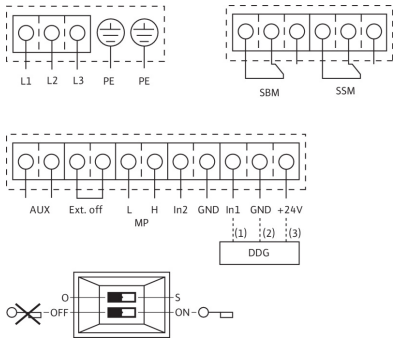

Requested data

Flow	
Head	
Media	Water 100 %
Fluid temperature	20.00 °C
Density	998.30 kg/m³
Kin. viscosity	1.00 mm²/s

Hydraulic data (Duty point)

Flow	
Head	
Power input P1	
NPSH	

Product data

Glanded energy-saving single pump
BL-E32/125-4/2

Kind of operation	dp-v
Max. operating pressure	1,600 kPa
Fluid temperature	-20 °C ... +140 °C
Max. ambient temperature	40 °C
Minimum efficiency index (MEI)	≥ 0.4

Motordata per Motor/Pump

Motor design	AC motor
Efficiency class	IE4
Mains connection	3~400 V / 50 Hz
Permitted voltage tolerance	+-10 %
Max. speed	2,900 1/min
Rated power P2	4.00 kW
Rated current	10.00 A
Degree of protection	IP55
Insulation class	F
Motor protection	PTC integrated

Fitting dimensions

Pipe connection on the suction side	DN 50, PN 16
Pipe connection (pressure side)	DN 32, PN 16
Port to Port	-

Materials

Pump housing	5.1301, EN-GJL-250 cataphoretic-
Impeller	EN-GJL-200
Shaft	1.4122
Shaft seal	AQ1EGG

Information for order placements

Weight approx.	69 kg
Item number	2222430