Contact
E-mail
Phone

Customer

Contact
E-mail
Phone

Technical data

Glanded monobloc pump
Atmos GIGA-B 40/240-22/2

Project ID Untitled project 2025-03-01 17:45:51.999

Project name
Installation location
Customer pos. No.

Date 2025-03-01

Duty chart

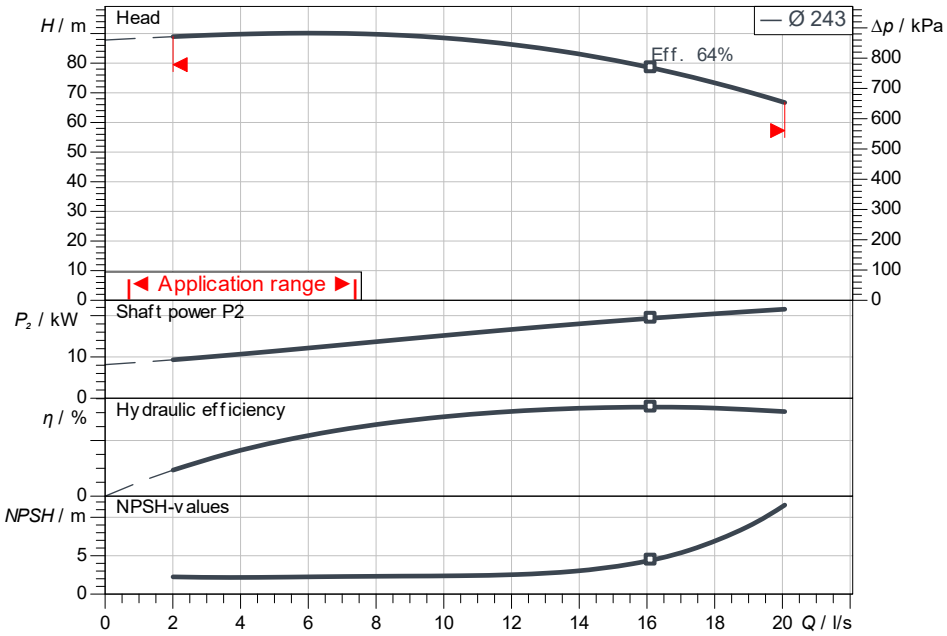

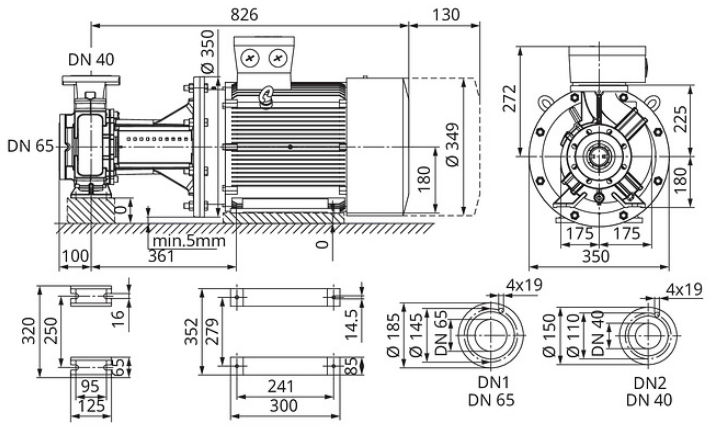

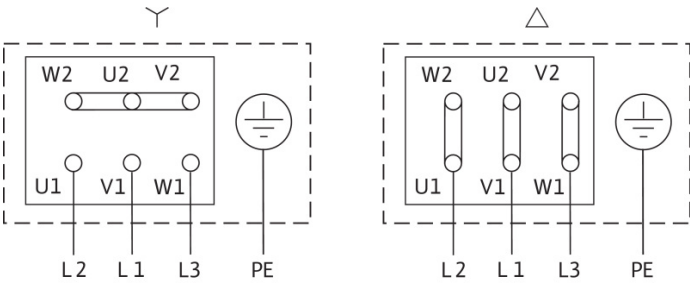

Requested data

Flow	
Head	
Media	Water 100 %
Fluid temperature	20.00 °C
Density	998.30 kg/m³
Kin. viscosity	1.00 mm²/s

Hydraulic data (Duty point)

Flow	
Head	
Shaft power P2	
Hydraulic efficiency	
NPSH	

Product data

Glanded monobloc pump	
Atmos GIGA-B 40/240-22/2	
Max. operating pressure	1,600 kPa
Fluid temperature	-20 °C ... +140 °C
Max. ambient temperature	40 °C
Minimum efficiency index (MEI)	≥ 0.4

Motordata per Motor/Pump

Motor efficiency level	IE3
Mains connection	3~400 V / 50 Hz
Permitted voltage tolerance	+-10 %
Rated speed	2,900 1/min
Rated power P2	22.00 kW
Rated current	38.50 A
Power factor	0.9
Efficiency	
50% / 75% / 100%	91.7/ 92.9/92.7%
Degree of protection	IP55
Insulation class	F
Motor protection	PTC integrated

Fitting dimensions

Pipe connection on the suction side	DN 65, PN 16
Pipe connection (pressure side)	DN 40, PN 16
Port to Port	-

Materials

Pump housing	
5.1301, EN-GJL-250 cataphoretic-coated	
Impeller	EN-GJL-200
Lantern	5.1301/EN-GJL-250
Shaft	1.4122
Shaft seal	AQ1EGG

Information for order placements

Weight approx.	292 kg
Item number	2213856