Contact
E-mail
Phone

Customer

Contact
E-mail
Phone

Technical data

Non self-priming multistage centrifugal pump
MHIL 106-E-3-400-50-2

Project ID Untitled project 2025-03-03 10:52:49.529

Project name
Installation location
Customer pos. No.

Date 2025-03-03

Duty chart

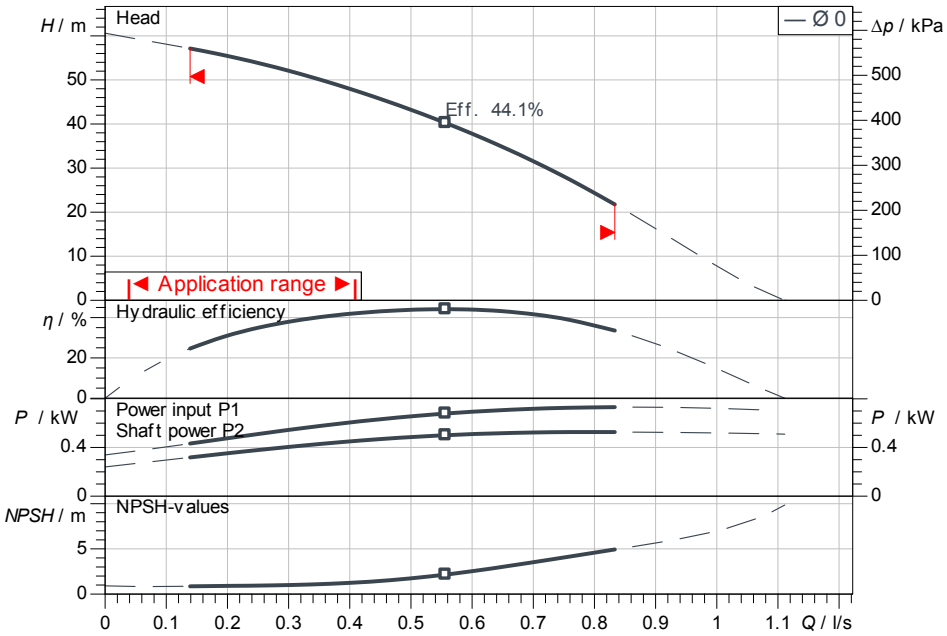

ISO 9906: 2012 3B

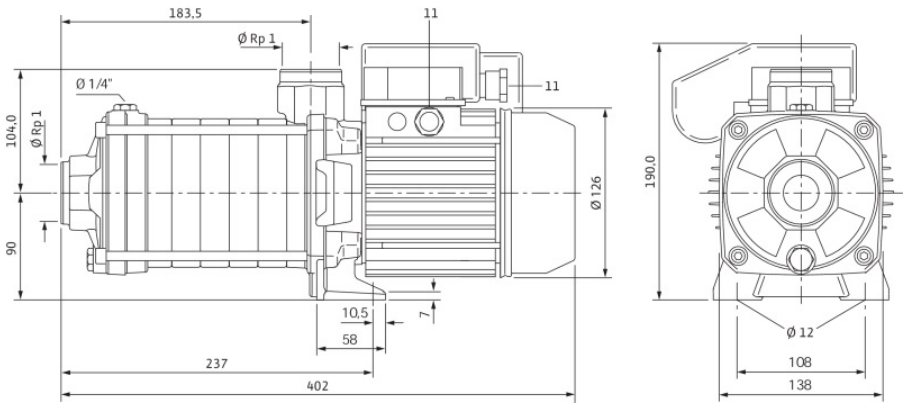

Requested data

Flow	
Head	
Media	Water 100 %
Fluid temperature	20.00 °C
Density	998.30 kg/m³
Kin. viscosity	1.00 mm²/s

Hydraulic data (Duty point)

Flow	
Head	
Shaft power P2	
Hydraulic efficiency	
NPSH	

Product data

Non self-priming multistage centrifugal pump	
MHIL 106-E-3-400-50-2	
Max. operating pressure	1,000 kPa
Inlet pressure max.	6 bar
Fluid temperature	-15 °C ... +90 °C
Max. ambient temperature	40 °C

Motordata per Motor/Pump

Motor efficiency level	IE1
Mains connection	3~400 V / 50 Hz
Permitted voltage tolerance	+-10 %
Max. speed	2,900 1/min
Rated power P2	0.55 kW
Rated current	1.56 A
Power factor	0.77
Efficiency	
50% / 75% / 100%	59/64.3/64.6%
Degree of protection	IP54
Insulation class	F
Motor protection	

Fitting dimensions

Pipe connection on the suction side	Rp 1, PN 10
Pipe connection (pressure side)	Rp 1, PN 10

Materials

Pump housing	5.1301/EN-GJL-250
Impeller	1.4404
Shaft	1.4028
Shaft seal	Q1BE3GG
Gasket material	EPDM

Information for order placements

Weight approx.	13.7 kg
Item number	4083891

Dimensions mm