Contact
E-mail
Phone

Customer

Contact
E-mail
Phone

Technical data

Submersible pump
Sub TWI 8.90-17-C-SD

Project ID	Untitled project 2025-03-17 07:47:37.014
Project name	
Installation location	
Customer pos. No.	

Date 2025-03-17

Duty chart

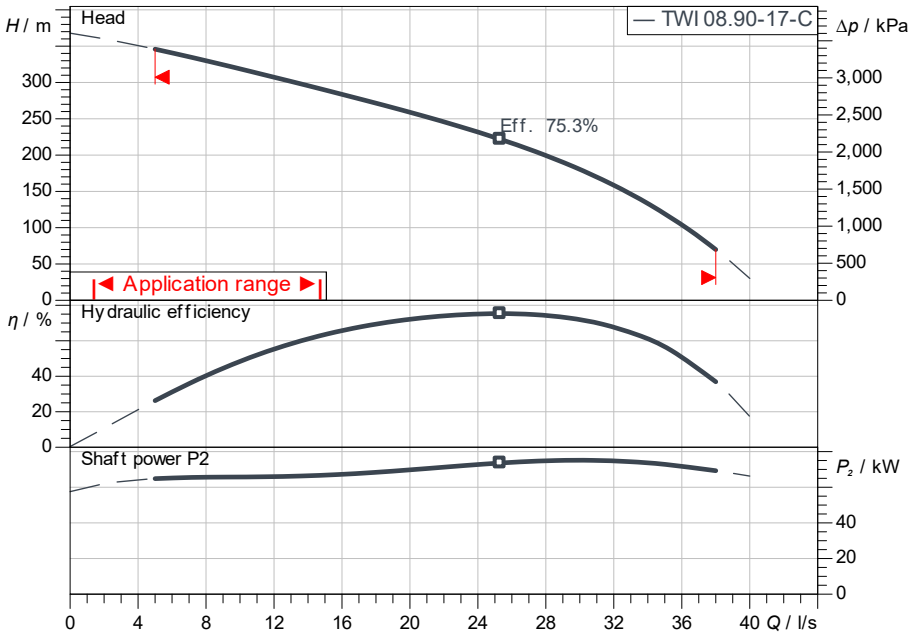

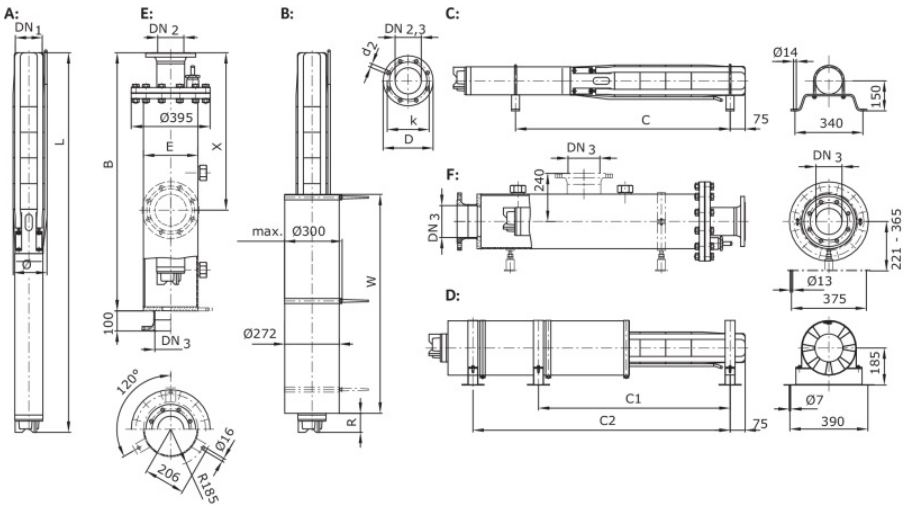

Requested data

Flow	
Head	
Media	Water 100 %
Fluid temperature	20.00 °C
Density	998.30 kg/m³
Kin. viscosity	1.00 mm²/s

Hydraulic data (Duty point)

Flow	
Head	
Shaft power P2	
Hydraulic efficiency	
Power input P1	

Product data

Submersible pump	
Sub TWI 8.90-17-C-SD	
Max. operating pressure	4,000 kPa
Fluid temperature	3 °C ... +30 °C
Minimum efficiency index (MEI)	-
Max. pump diameter	204 mm

Motordata per Motor/Pump

Mains connection	3~400 V / 50 Hz
Type of motor	Submersible motor
Activation type	Star-Delta (YΔ)
Min. flow at the motor	0.16 m/s
Motor diameter	195.6 mm
Permitted voltage tolerance	+-5 %
Nominal speed	2,900 1/min
Rated power P2	93.00 kW
Rated current	186.00 A
Power factor	0.83
Degree of protection	IP68
Insulation class	F

Cable

Length of connecting cable	8 m
Cable type	3x1x16+3x1x16+1x16

Fitting dimensions

Discharge size	Rp 5
Flange standard	-

Materials

Pump housing	1.4301
Motor housing	5.1301/EN-GJL-250
Shaft	1.4057
Impeller	1.4301

Information for order placements

Weight approx.	375 kg
Item number	6075431

Approval

Dimensions mm

c	3,470	W	1,800
C1	3,234		
L	4,427		
R	243		