Contact
E-mail
Phone

Customer

Contact
E-mail
Phone

Technical data

Glandless premium smart-pump
Stratos MAXO 30/0,5-10 PN16

Project ID	Untitled project 2025-03-04 09:37:01.987
Project name	
Installation location	
Customer pos. No.	

Date 2025-03-04

Duty chart

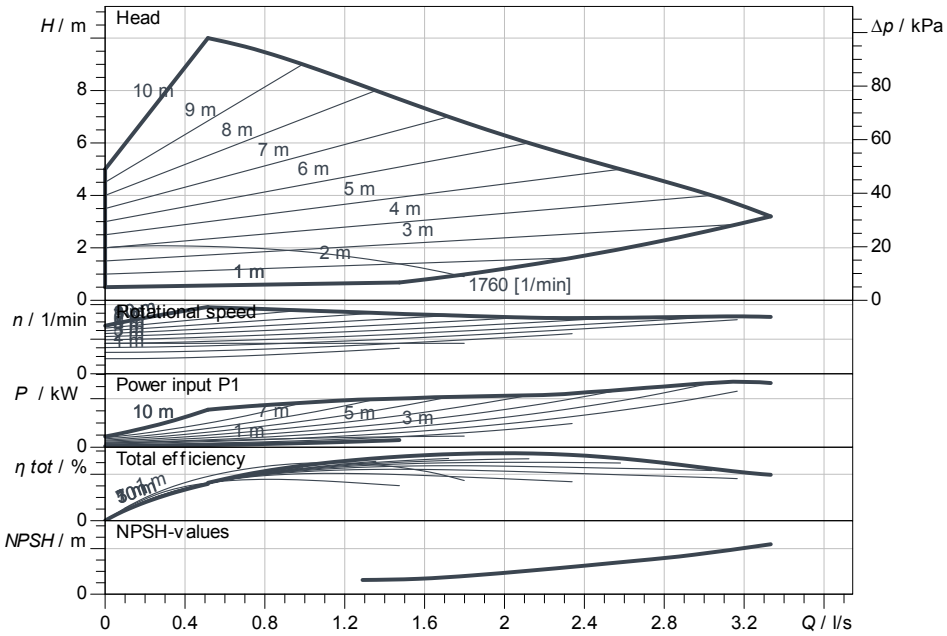

Requested data

Flow	
Head	
Media	Water 100 %
Fluid temperature	20.00 °C
Density	998.30 kg/m³
Kin. viscosity	1.00 mm²/s

Hydraulic data (Duty point)

Flow	
Head	
Power input P1	

Product data

Glandless premium smart-pump	
Stratos MAXO 30/0,5-10 PN16	
Kind of operation	dp-v
Max. operating pressure	1,600 kPa
Fluid temperature	-10 °C ... +110 °C
Max. ambient temperature	40 °C

Motordata per Motor/Pump

Motor design	EC motor
Energy efficiency index (EEI)	≤ 0.19
Mains connection	1~230 V / 50 Hz
Permitted voltage tolerance	+-10 %
Max. speed	3,950
Power input P1(max)	0.28 kW
Current consumption	1.2 A
Degree of protection	IPX4D
Insulation class	F
Emitted interference	EN 61800-3;2004+A1
Interference resistance	EN 61800-3;2004+A1
Threaded cable connection	

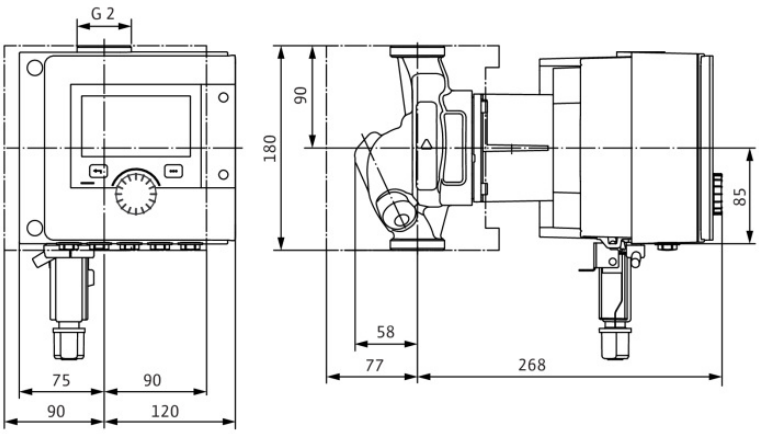

Fitting dimensions

Pipe connection on the suction side	G 2, PN 16
Pipe connection (pressure side)	G 2, PN 16
Port to Port	180 mm

Materials

Pump housing	EN-GJL-200
Impeller	PPS-GF40
Shaft	1.4122, DLC-coated
Bearing	Carbon, antimony-impregnated

Information for order placements
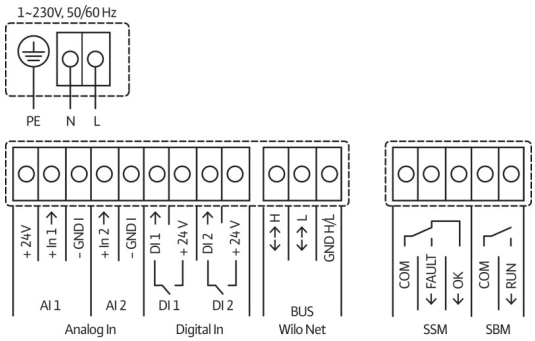
Weight approx.	7.5 kg
Item number	2186263