Contact
E-mail
Phone

Customer

Contact
E-mail
Phone

Technical data

High-pressure multistage centrifugal pump
Helix V 413-1/16/E/KS/400-50

Project ID	Untitled project 2025-03-03 20:19:56.538
Project name	
Installation location	
Customer pos. No.	

Date 2025-03-03

Duty chart

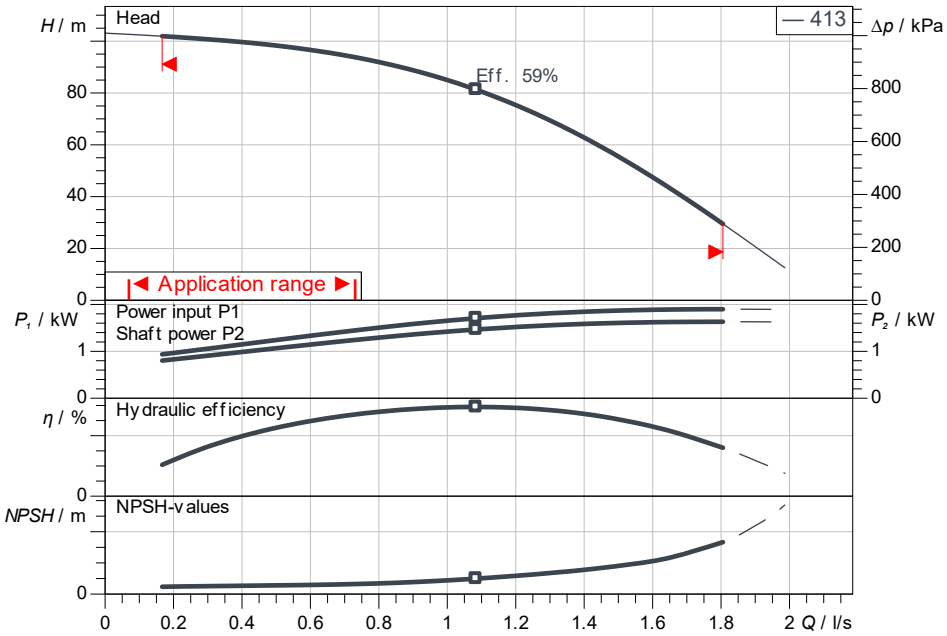

ISO 9906: 2012 3B

Dimensions mm

H	975
H2	681
ØM	172
X	132
X	132

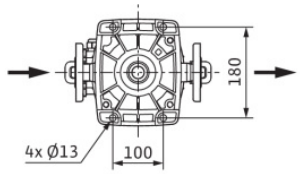

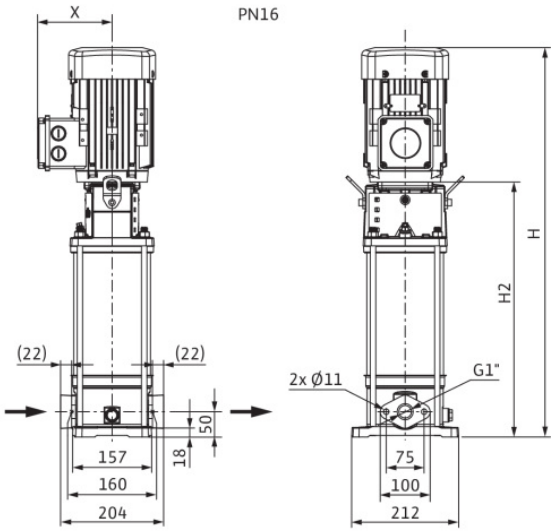

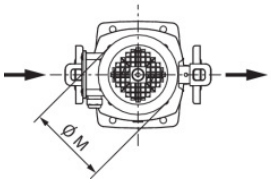

Requested data

Flow	
Head	
Media	Water 100 %
Fluid temperature	20.00 °C
Density	998.30 kg/m³
Kin. viscosity	1.00 mm²/s

Hydraulic data (Duty point)

Flow	
Head	
Shaft power P2	
Hydraulic efficiency	
NPSH	

Product data

High-pressure multistage centrifugal pump	
Helix V 413-1/16/E/KS/400-50	
Max. operating pressure	1,600 kPa
Inlet pressure max.	10 bar
Fluid temperature	-30 °C ... +120 °C
Max. ambient temperature	50 °C
Minimum efficiency index (MEI)	≥ 0.7

Motordata per Motor/Pump

Motor efficiency level	IE3
Mains connection	3~400 V / 50 Hz
Permitted voltage tolerance	+-10 %
Max. speed	2,900 1/min
Rated power P2	2.20 kW
Rated current	4.30 A
Power factor	0.87
Service factor	1.15
Efficiency	
50% / 75% / 100%	84.8/86.2/85.9%
Degree of protection	IP55
Insulation class	F
Motor protection	PTO

Fitting dimensions

Pipe connection on the suction side	G 1, PN 16
Pipe connection (pressure side)	G 1, PN 16

Materials

Pump housing	1.4301
Impeller	1.4307
Shaft	1.4301
Shaft seal	BQ7EGG
Gasket material	EPDM

Information for order placements

Weight approx.	42 kg
Item number	4160534