Contact
E-mail
Phone

**Customer**

Contact
E-mail
Phone

# Technical data

## Glanded energy-saving twin-head pump
## DL-E 125/305-22/4

| | |
|---|---|
| Project ID | Untitled project 2025-03-03 05:48:28.279 |
| Project name | |
| Installation location | |
| Customer pos. No. | |

Date 2025-03-03

**Duty chart**

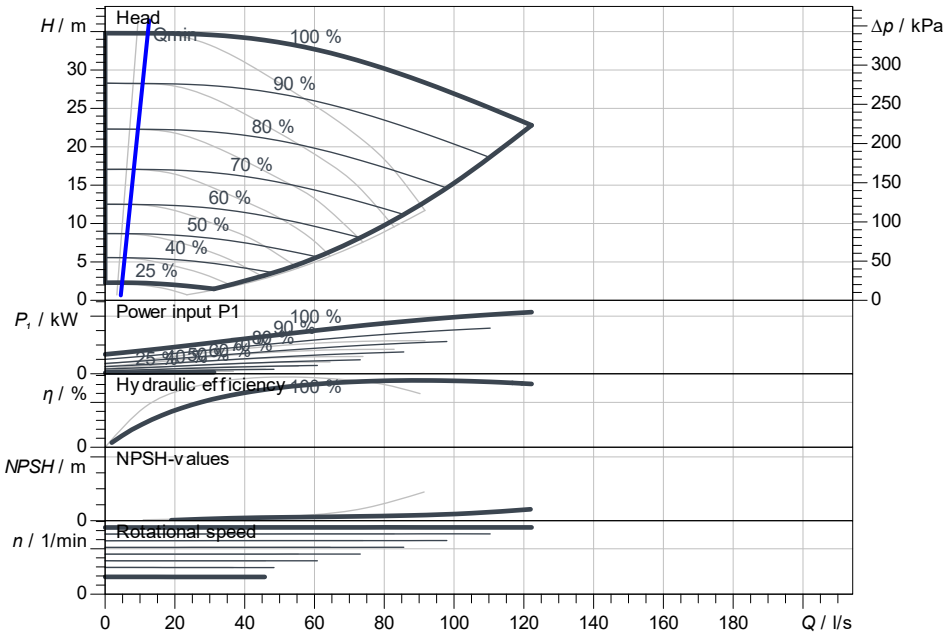


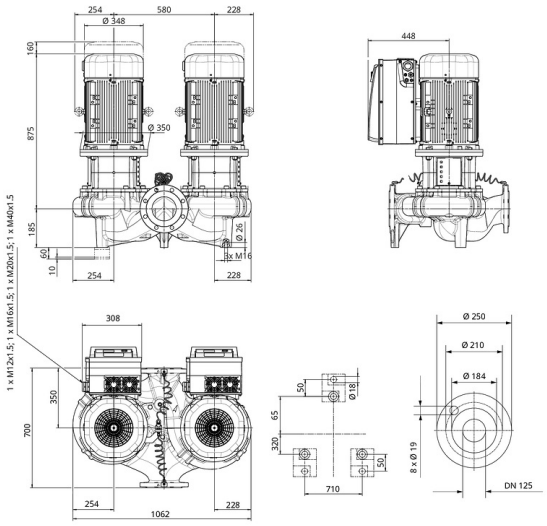

**Requested data**

| | |
|---|---|
| Flow | |
| Head | |
| Media | Water 100 % |
| Fluid temperature | 20.00 °C |
| Density | 998.30 kg/m³ |
| Kin. viscosity | 1.00 mm²/s |

**Hydraulic data (Duty point)**

| | |
|---|---|
| Flow | |
| Head | |
| Power input P1 | |
| NPSH | |

**Product data**

Glanded energy-saving twin-head pump
DL-E 125/305-22/4

| | |
|---|---|
| Kind of operation | n-const ADD |
| Max. operating pressure | 1,600 kPa |
| Fluid temperature | -20 °C ... +140 °C |
| Max. ambient temperature | 40 °C |
| Minimum efficiency index (MEI) | ≥ 0.4 |

**Motordata per Motor/Pump**

| | |
|---|---|
| Motor design | AC motor |
| Efficiency class | IE4 |
| Mains connection | 3~400 V / 50 Hz |
| Permitted voltage tolerance | +-10 % |
| Max. speed | 1,480 1/min |
| Rated power P2 | 22.10 kW |
| Rated current | 36.60 A |
| Degree of protection | IP55 |
| Insulation class | F |
| Motor protection | PTC integrated |

**Fitting dimensions**

| | |
|---|---|
| Pipe connection on the suction side | DN 125, PN 16 |
| Pipe connection (pressure side) | DN 125, PN 16 |
| Port to Port | 700 mm |

**Materials**

| | |
|---|---|
| Pump housing | 5.1301, EN-GJL-250 cataphoretic- |
| Impeller | EN-GJL-200 |
| Lantern | 5.1301, EN-GJL-250 cataphoretic- |
| Shaft | 1.4122 |
| Shaft seal | AQ1EGG |

**Information for order placements**

| | |
|---|---|
| Weight approx. | 748 kg |
| Item number | 2222912 |