LOWARA
a xylem brand

NSCF100-160/550/L26UCC4

Technical data

Company name
Contact
Phone number
e-mail address

Operating data

1	Pumpe type	Single head pump		Fluid	Water, pure		
2	No. of pumps		1	Operating temperature t A		°F	39.2
3	Nominal flow	US g.p.m.	0	Max / Min Operating Temperature mech. Seal		°F	120 / -25
4	Nominal head	ft	0	pH-value at t A			7
5	Static head	ft	0	Density at t A		lb/ft³	62.4
6	Inlet pressure	psi	0	Kin. viscosity at t A		ft²/s	1.689E-5
7	Environmental temperature	°F	68	Vapor pressure at t A		psi	14.5
8	Available system NPSH	ft	0	Altitude			0

Pump data

9	Lubrication	Standard, Grease lubrication [Std]					
10	Execution	Standard coupling		Impeller Ø	Max.	inch	7 1/2
11	Design	Horizontal			designed	inch	7 1/2
12	Operating speed	3564 rpm	Stages 1		Min.	inch	5 13/16
13	Suction nozzle	DN125 / PN10/16 / EN1092-2		Flow	Nominal	US g.p.m.	
14	Discharge nozzle	DN100 / PN10/16 / EN1092-2			Max-	US g.p.m.	1853.9
15	Max. casing pressure	psi			Min-	US g.p.m.	353.1
16	Max. working pressure	psi	92.9	Head	Nominal	ft	
17	Impeller type		Radial impeller		at Qmax	ft	118.6
18	Head H(Q=0)	ft	210		at Qmin	ft	210.6
19	Max. shaft power	hp	72.3	Shaft power		hp	
20	Pump weight	kg	180.8	Efficiency		%	
21	Total weight	lb	On demand	NPSH 3%		ft	

Materials

22	Pump		Shaft Seal	
23	Volute Casing	Cast Iron, EN 1561 - GJL-250, ASTM Class 35	Single mechanical seal, without shaft sleeve	
24	Impeller	Cast Iron, EN 1561 - GJL-200, ASTM Class 30	eMG12 - Ø38mm	BQ7EGG-WA
25	Casing Cover	Cast Iron, EN 1561 - GJL-250, ASTM Class 35	Mechanical seal diameter	1 1/2 inch
26	Shaft	Stainless steel, 1.4057, AISI 431	1. Rotating ring	Carbon graphite resin impregnated
27	Wear ring	Stainless steel, 1.4301, AISI 304	2. Stationary ring	SiC, silicon carbide, sintered press.less
28	Impeller lock nut and washer	A4 (1.4401)	3. Secondary seal	Ethylene propylene rubber (EPDM)
29	Impeller key	Stainless steel, 1.4571, AISI 316Ti	4. Springs	CrNiMo - Steel
30	Fill and drain plugs	Galvanized carbon steel, EN 10277-3, AISI 1213 / 1215	5. Others	EPDM - WRAS
31	Bearing bracket	Cast Iron, EN 1561 - GJL-250, ASTM Class 35	Gaskets of the pump	Ethylene propylene rubber (EPDM)
32				
33				
34				
35				
36				
37				
38				
39				
40				
41				

Motor data

Electrical and dimensional data refer to IE3 motor

42	Manufacturer	Lowara		
43	Specific design	IE3 3ph Surface Motor - Premium Efficiency		
44	Type	3MGS 250 M B3 55 kW		
45	Rated power	73.756 hp	Rated current	97 A
46	Nominal speed	3564 rpm	Rated voltage	380 V
47	Frame size	250 M	Service factor	1
48	Weight lb	922.4	Degree of protection	IP55

Coupling

Manufacturer	Flender		
Series	Standard Coupling - N-EUPEX - Type B		
Shaft diameter	Pump 1 1/4 inch	Motor 2 3/8 inch	
Frame size	140		
Spacer length inch	3/16		
Weight lb	12.3		
Coupling protection	GR.COUPLGUARD ES32-190-23 A4	5.291 lb	

Base plate

49	Name	BASEFRAME_NSC80-6_C00
50	Weight lb	334.7

Remarks

Project	Xylect-20182283	Created by		Last update	1/11/2025
Block	NSCF100-160/550/L26UCC4	Created on	1/11/2025		

LOWARA
a xylem brand

NSCF100-160/550/L26UCC4

Performance curve

Company name
Contact
Phone number
e-mail address

	Ø	Pump capacity Operating range Min.	Max.	η Max.	Pump head H(Q=0)	η Max.	Shaft power P2 P2(Q=0)	Max.	η Max.
	mm	US g.p.m.	US g.p.m.	US g.p.m.	ft	ft	hp	hp	hp
actual	7 1/2	353	1850	1450	214	165		72.3	71.1
Min.	0	/	/	1120	125	100		/	36.8
Max.	7 1/2	/	/	1450	214	165		/	71.1

Frequency	Hz	60
Operating speed	rpm	3564
Nominal flow	US g.p.m.	0
Nominal head	ft	0
Inlet pressure	psi	0
Static head	ft	0

Power datas refered to:

Water, pure [100%] ; 39.2°F; 62.4lb/ft³; 1.69E-5ft²/s

hydr. Performance acceptance acc. To EN ISO 9906 Class Grade 3B

MEI: >=0,70 - according to Ecodesign Directive 2009/125/EC and Regulation (EU) No.547/2012

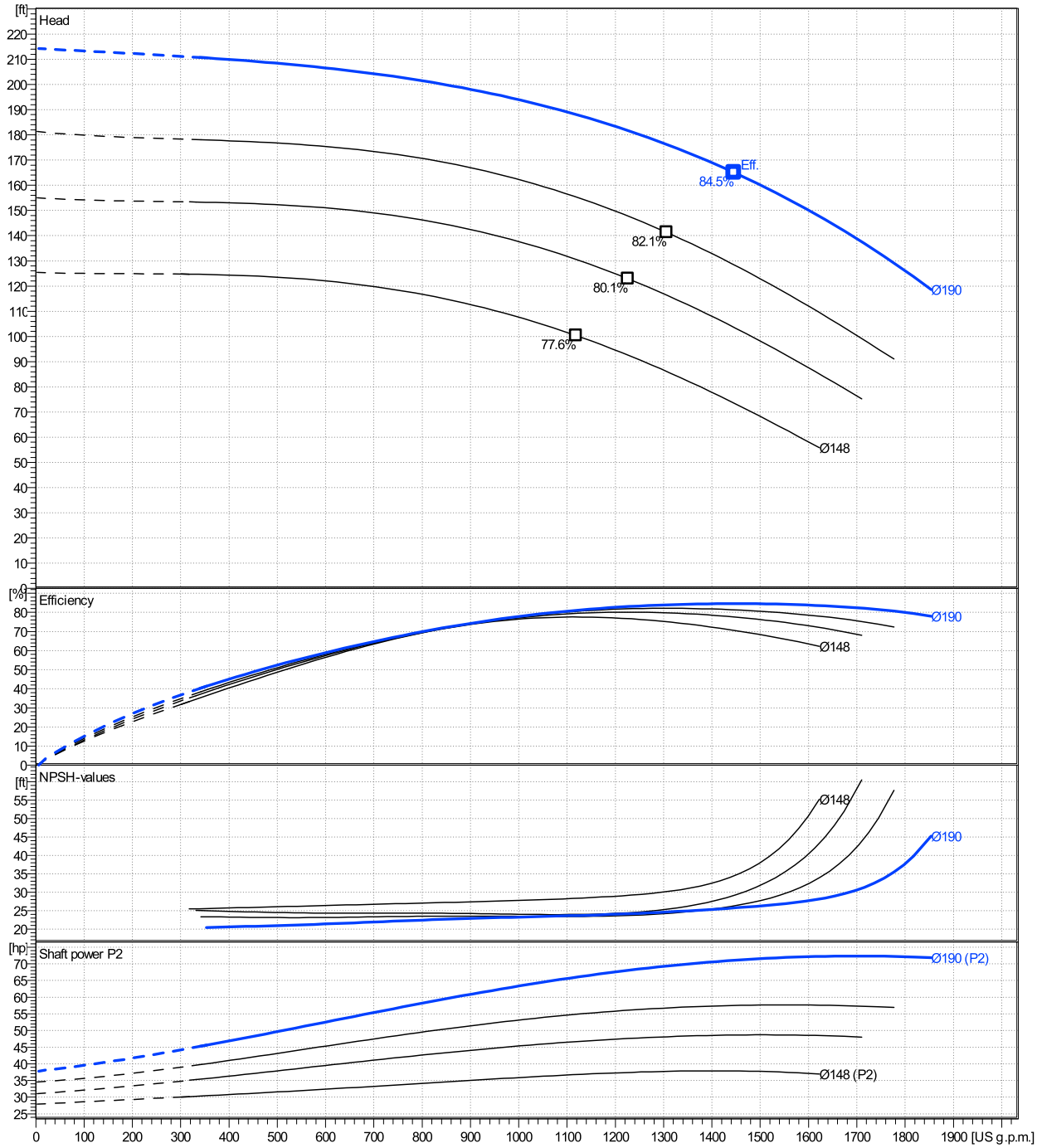

Project	Xylect-20182283	Created by		Last update	1/11/2025
Block	NSCF100-160/550/L26UCC4	Created on	1/11/2025		

Program version: 75.0 - 06/11/2024 (Build 274)
Data version: 15/12/2024 18:59
User group(s): Xylem: United Kingdom - EXT

LOWARA
a xylem brand

NSCF100-160/550/L26UCC4

Dimensions

Company name
Contact
Phone number
e-mail address

Frame mounted
Standard coupling
3MGS 250 M B3 55 kW

Electrical and dimensional data refer to IE3 motor

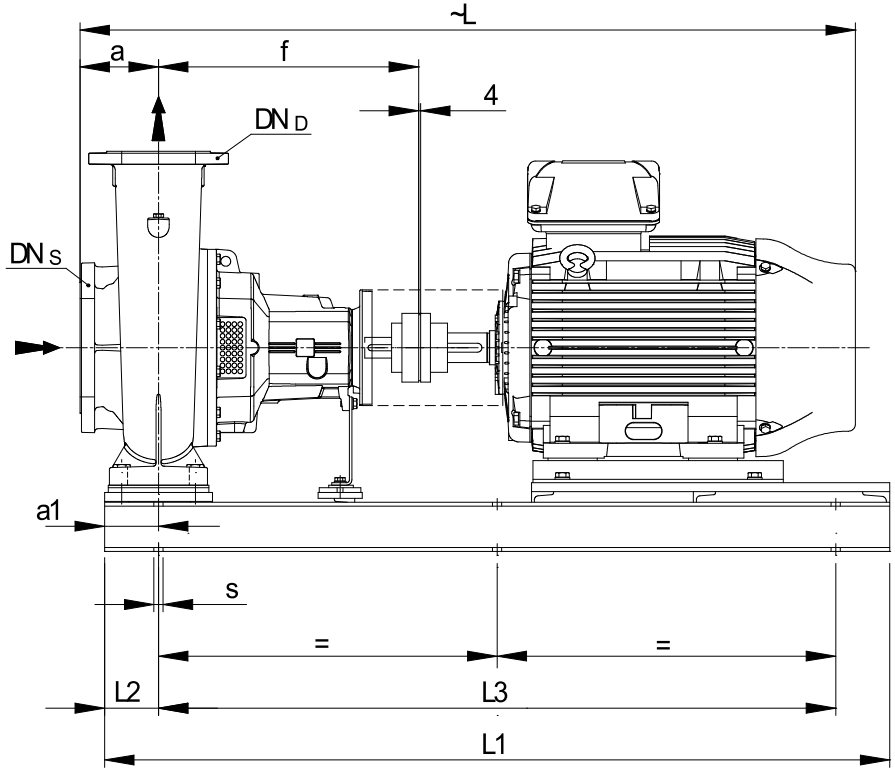

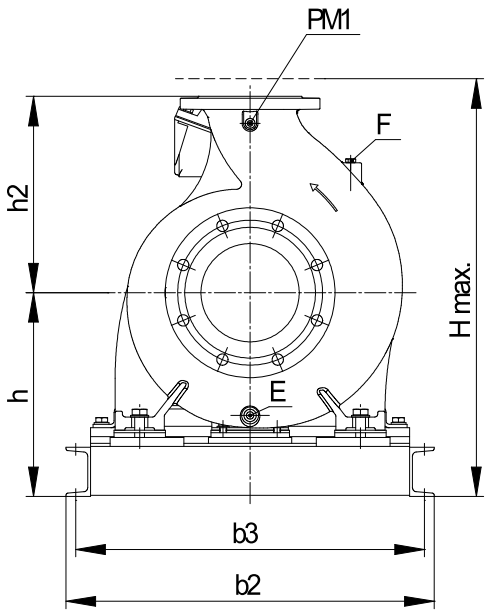

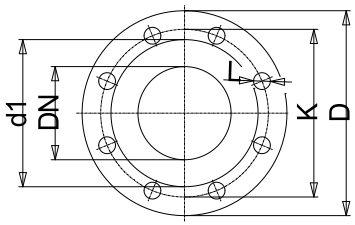

Value C, D may vary from Standard

Dimensions [inch]

a	$4^{15}/_{16}$		
a1	$4^{5}/_{16}$		
b2	$29^{1}/_{2}$		
b3	$27^{15}/_{16}$		
CTO			
DNd	$3^{15}/_{16}$		
DNs	$4^{15}/_{16}$		
E	3/8"		
F	3/8"		
f	$18^{1}/_{2}$		
Guard	$8^{13}/_{16}$		
h	$15^{15}/_{16}$		
h2	$11^{1}/_{32}$		
Hmax	$30^{13}/_{16}$		
L1	$61^{1}/_{32}$		
L2	$4^{5}/_{16}$		
L3	$52^{3}/_{8}$		
PM1	1/4"		
s	6xØ19		
Trim			
Volumen	$^{1}/_{16}$		

Weight

Total weight	On demand kg

Connections

Suction nozzle		Discharge nozzle	
DN125		DN100	
PN10/16		PN10/16	
EN1092-2		EN1092-2	
C	$1^{1}/_{32}$	C	$^{15}/_{16}$
D	$10^{1}/_{16}$	D	$9^{1}/_{16}$
d1	$7^{1}/_{4}$	d1	$6^{3}/_{16}$
K	$8^{1}/_{4}$	K	$7^{1}/_{16}$
L	$^{3}/_{4}$	L	$^{3}/_{4}$
z	$^{5}/_{16}$	z	$^{5}/_{16}$

Dimensions and weight without obligation

Project	Xylect-20182283	Created by		Last update	1/11/2025
Block	NSCF100-160/550/L26UCC4	Created on	1/11/2025		